E0000

INSTRUCTION BOOK
LIVRET D'INSTRUCTIONS 使用手冊

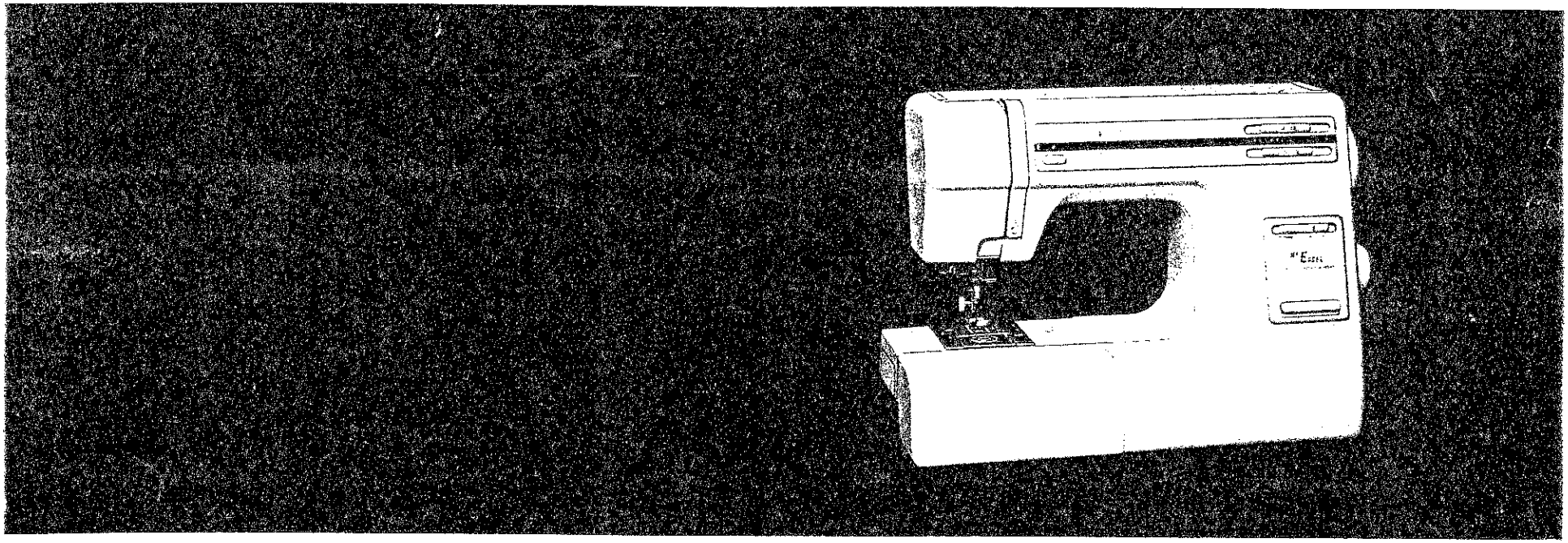

MODEL *MODÈLE* 18W/23X

嘉義啓智學校
實習輔導處
TEL 05-285
嘉義市港坪里大同路100號

目　次

主要部份名稱

各部名稱 ..... 4 ～ 5
壓腳和附件 6
零件盒 7

車縫前的準備

電源的供應 8
踏板的控制 9
兩段的速度控制 9
燈炮的換法 9
壓腳壓力控制鈕 10
送布齒的降低法 10
壓腳的裝卸法 11
壓腳座的裝卸法 12
回針桿 12
車縫引導線 12
車針換法 13
車線與車針及厚薄布料的搭配 14
梭線的繞法 ..... 15 ～ 17
穿線的說明 18
穿線器的操作說明 19
吊底線的方法 20
上線張力的調整 21
花樣的選擇 22
寬度控制鈕 22
密度控制鈕 22
針位的選擇 22

基本的縫紉方法

直線的縫法 23
縫製方向的轉換法 24
厚布料的縫製法 24
鋸齒狀縫製法 25

車力美有限公司
台南市西門路四段一五一號四F
電話：2811919（車樂美專櫃）

可運用的車縫法

鎖布邊 25
布邊的車縫法 26
針織布料的布邊車縫法 26
直線三重縫法 27
伸縮布的車縫法 27
釘釦子的方法 28
自動開釦孔的方法 ..... 29 ～ 31
手動開釦孔的方法 ..... 32 ～ 33
鈕孔包線的開法 34
拉鍊的車縫法 ..... 35 ～ 37
捲邊縫法 ..... 38 ～ 39
盲縫暗針縫法 40

裝飾圖案的車縫法

裝飾花紋的車法 41
伸縮性布料的裝飾縫法 41
花紋的調整法 42
碎褶縫法 42
平行線縫法（棉被縫） 43
細褶縫 44
貝殼形裝飾縫法 45
兩片布的平行接縫法 45
貼布繡 46
補綴裝飾的車縫法 46

機器的保養方法

梭殼的清掃方法 47
梭殼槽的清掃方法 48
梭殼的放置法 48
故障的原因及排除法 ..... 49 ～ 50

速度調節器(只有23X)

ESSENTIAL PARTS *PIECES PRINCIPALES*

Names of Parts
各部名稱

1 Stitch length control
2 Zigzag width control
3 Bobbin winder stopper
4 Bobbin winder spindle
5 Foot storage compartment
6 Flip-top sewing instruction panel
7 Spool holder (large)
8 Spool pin
9 Top cover
10 Thread tension dial
11 Pressure dial
12 Face plate
13 Buttonhole lever
14 Thread cutter
15 Needle threader
16 Needle plate
17 Hook cover plate
18 Hook cover plate release button
19 Extension table
(Accessory storage box)
20 Reverse stitch button

1 密度控制
2 寬度控制
3 線軸壓扳
4 卷線軸
5 放置壓腳位置
6 標示板
7 擋線盤
8 線軸柱
9 天板
10 上線鬆緊刻度盤
11 壓腳壓力控制鈕
12 面板
13 鈕孔桿
14 割線器
15 穿線器
16 針板
17 梭蓋
18 梭蓋控制鈕
19 補助櫃
(零件盒)
20 回針桿

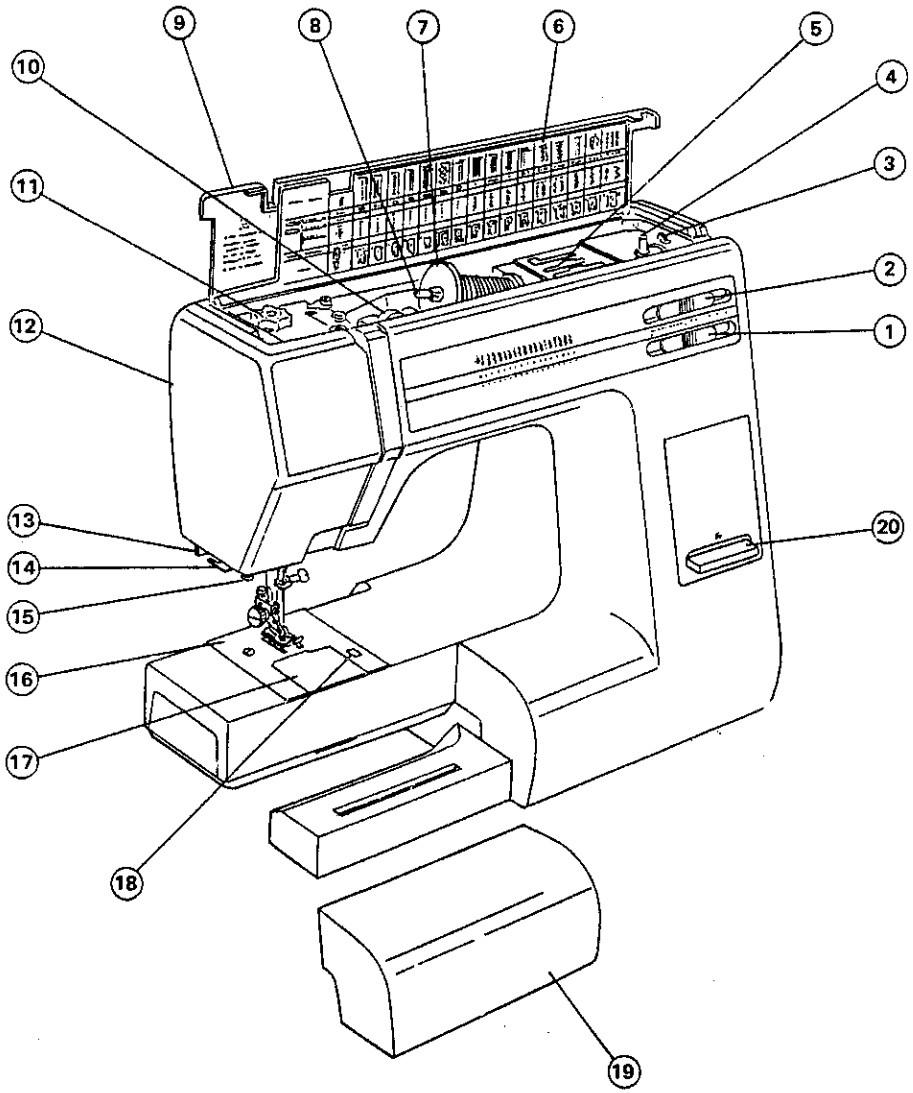

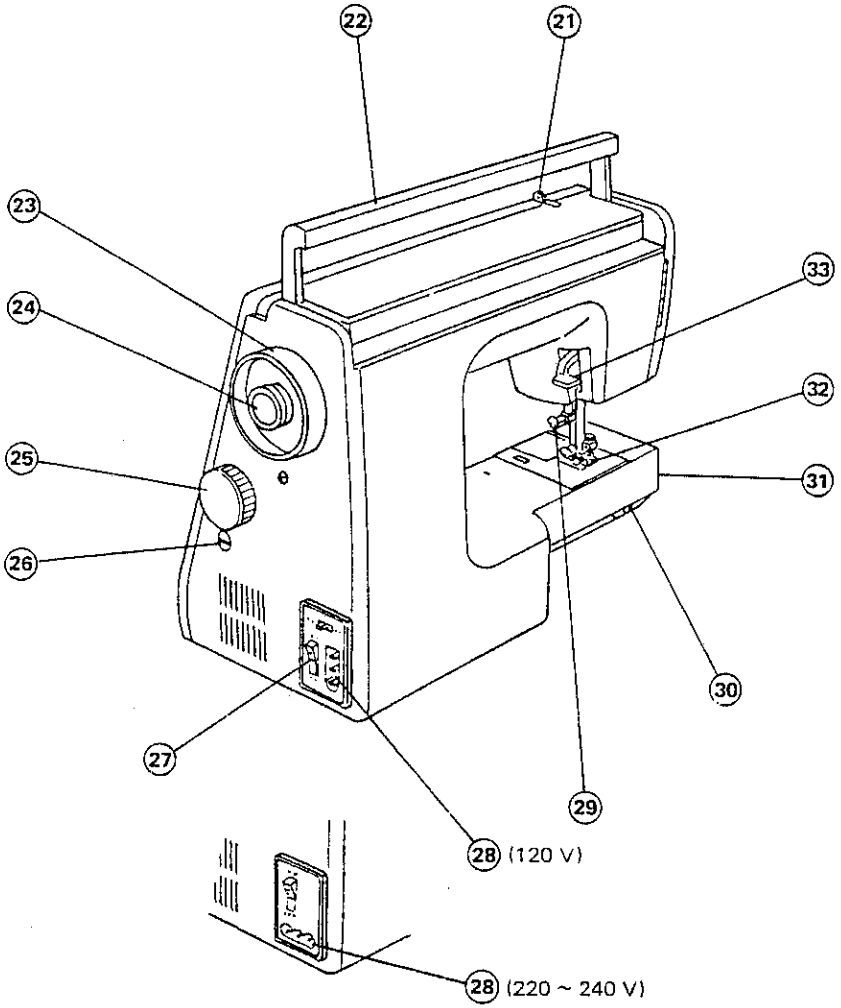

21	Thread take-up lever
22	Carrying handle
23	Balance wheel
24	Clutch knob
25	Pattern selector dial
26	Feed balance dial
27	Power switch
28	Machine socket
29	Needle clamp screw
30	Drop feed lever
31	Free arm
32	Presser foot
33	Presser foot lifter

21	天平
22	把手
23	天輪
24	連軸旋鈕
25	花紋選擇刻度盤
26	傳送調整螺絲
27	電源開關
28	插座
29	車針固定螺絲
30	送布齒升降桿
31	自由臂
32	壓腳
33	壓腳升降桿

Foot Storage Compartment
壓腳和附件

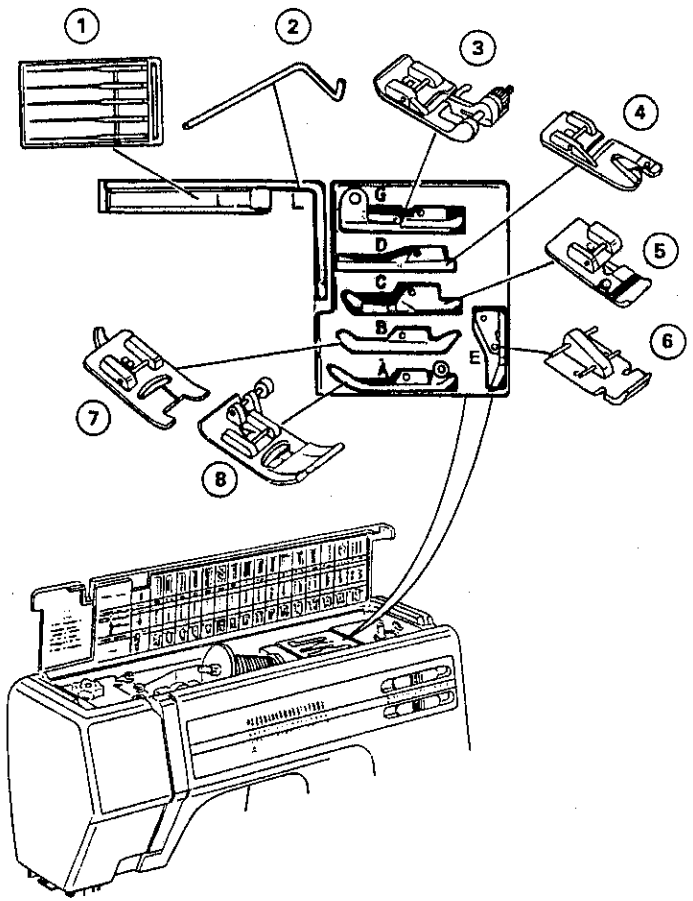

Each presser foot and pocket is lettered for easy identification and storage.
To achieve optimum sewing results, use the foot recommended for each sewing technique.

每一個壓腳上都有設定代號並有固定的位置可儲存，方便確認及拿取且不容易遺失。

1 Needle case
2 L. Quilter
3 G. Blind stitch hem foot
4 D. Hemmer foot
5 C. Overedge foot
6 E. Zipper foot
7 B. Transparent buttonhole foot
8 A. Zigzag foot
9 R. Automatic buttonhole foot

1 車針和針盒
2 L. 棒
3 G. 盲縫壓腳
4 D. 捲邊壓腳
5 C. 車布邊壓腳
6 E. 拉鍊壓腳
7 B. 透明壓腳
8 A. 基本壓腳
9 R. 自動開釦洞壓腳

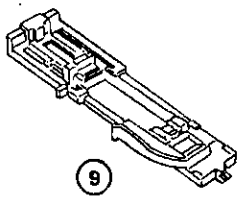

* The automatic buttonhole foot can be stored in the extension table.

* *Le pied à boutonnière automatique peut-être rangé dans la table d'extension.*

Extension Table (Accessory Storage Box)

零件盒(補助檯)

Extension Table

補助檯裝卸法

The extension table provides added sewing surface and can be easily removed for free arm sewing.

補助檯可做縫紉時的補助檯，亦可容易的拆卸造成自由臂，以方便車縫圓筒狀的物件

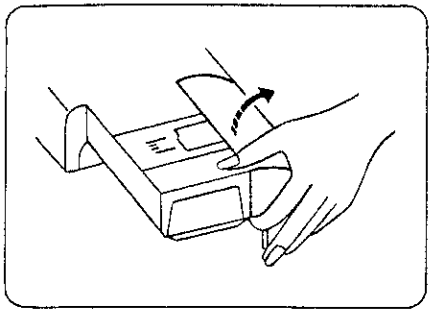

For free arm sewing

Lift out the extension table, as illustrated.

卸除法

用手扣住補助檯下方加以抬高

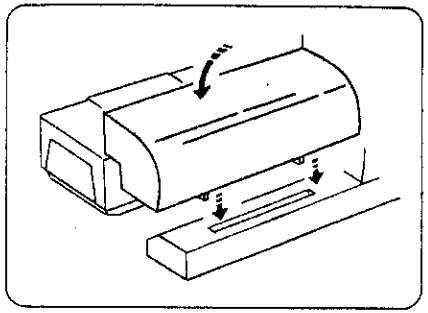

For attaching the table

Position the two pins of the storage box on the base slit and push down gently.

安裝法

補助檯足對合基本溝紋，由上方加以輕壓即可。

Accessory storage box

零件盒

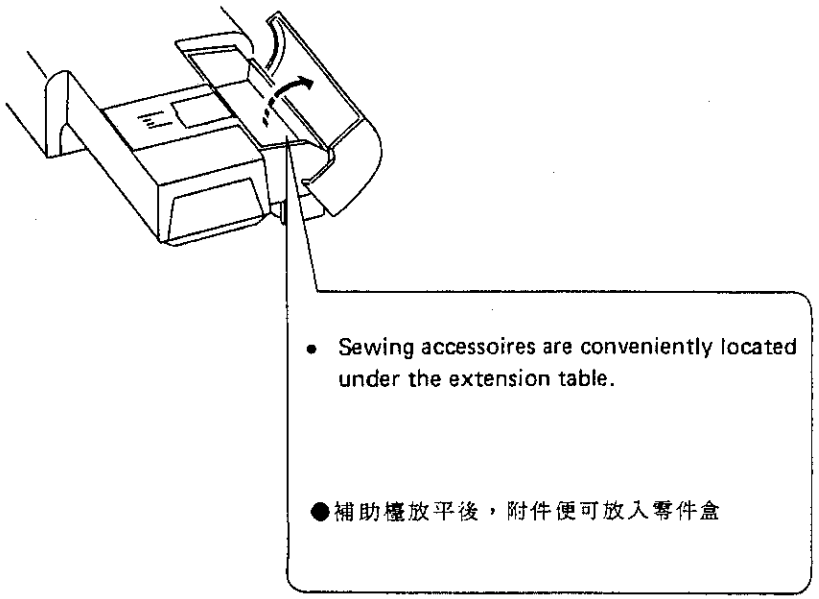

Connecting the Machine to the Power Supply
電源的供應

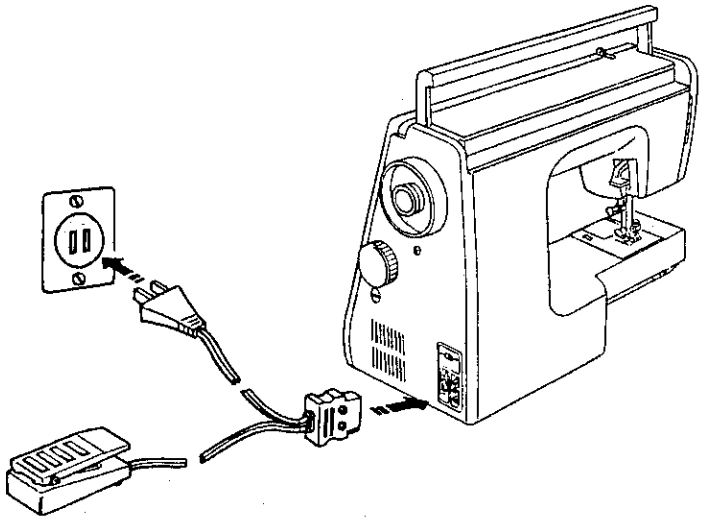

Before connecting the power, make sure the voltage and frequency of your electrical power conform to the machine.

Switch off the power, fit the nonreversible plug into the machine socket and plug the machine into the power supply.

Switch on the power.

在連接電源前請先確定電壓是否爲 100 ～ 120V
插電源前先將機器的開關關掉，連接插頭插上，再接到電源上。

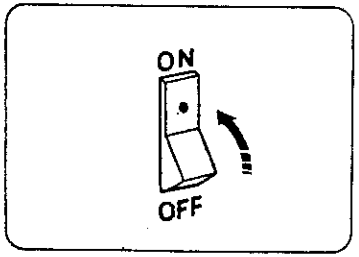

Foot Control
踏板的控制

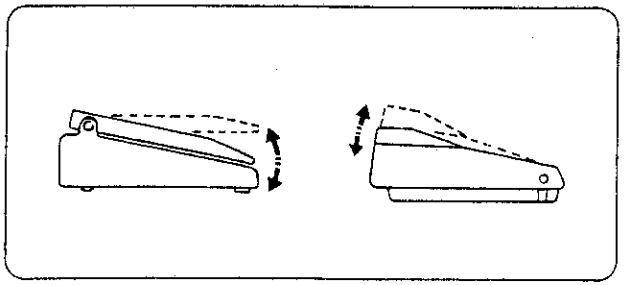

Sewing speed can be varied by the foot control. The harder you press on the control, the faster the machine runs.

Two Way Speed Control
兩段的速度控制

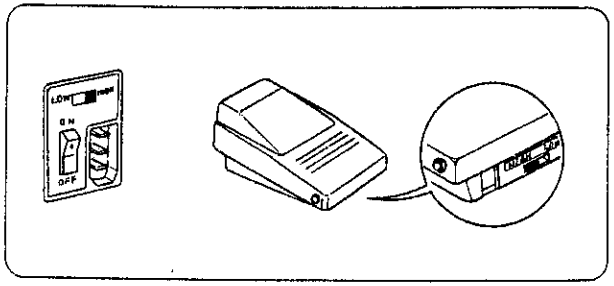

Sewing speed range can be varied by the control which is located either beside machine socket or on foot control.

For HIGH speed range, set the switch at "HIGH" mark.

For LOW speed range, set the switch at "LOW" mark.

* Do not move the switch when machine is running.

Sewing Light
燈泡的換法

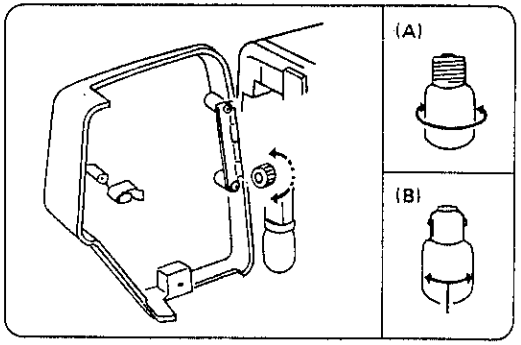

The sewing light is located behind the face plate.

[To replace the bulb]

(A) ● To remove . . . . . Turn to the left.
● To replace . . . . . Turn to the right.

(B) ● To remove . . . . . Push and twist to the left.
● To replace . . . . . Push and twist to the right.

NOTE: When replacing the bulb, unplug the machine.

車縫的速度可由腳踏板加壓力的輕重加以控制，腳踏板得重機器就車得快

機器的速度也可由電源插座上方的控制鈕或由腳踏板來控制。

假如要選擇快速度時可將按鈕推到"HIGH"的記號。

如要使速度慢下來則推到 LOW 的記號。

機器在運轉中請勿推動按鈕。

燈泡在機器的側面板裡

(A) ●卸下法.....左轉
●裝法.....右轉

(B) ●卸下法.....推入並且左轉
●裝上法.....推入並右轉

注意：換燈泡時，請將電源關掉

Pressure Dial
壓腳壓力控制鈕

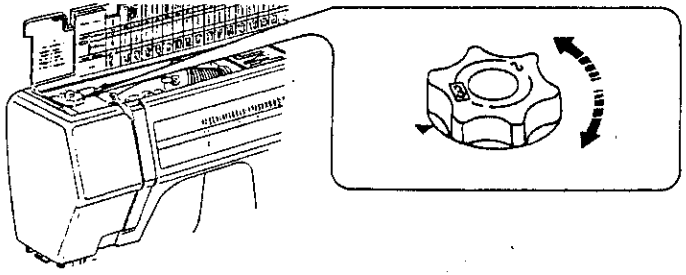

The pressure dial should be set at "3" for regular sewing. Reduce the pressure to "2" for appliques.

Set the pressure to "1" when sewing chiffon, lace, organdy and other fine fabrics. Velours and knits with a lot of stretch may also require a "1" setting.

正常的車縫壓腳壓力應調爲"3"貼布繡或繡花時壓力應調爲"2"

當車假縫、雪紡紗蕾絲、歐根紗和其他細薄的布料時，壓力調爲"1"

Dropping the Feed Dogs
送布齒的降低法

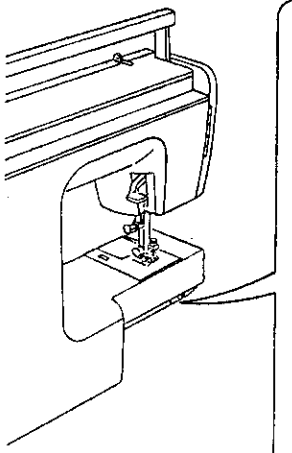

Drop feed lever is located underneath of free arm bed.

送布齒的裝卸裝置在自由臂的後面。

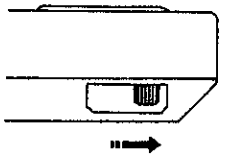

To raise the feed dogs, push the lever to the direction of arrow as illustrated.

送布齒抬高位置

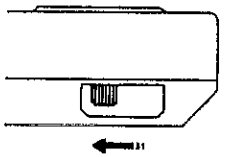

For dropping the feed dogs, push the lever to the direction of arrow as illustrated.

送布齒壓低位置

* Feed dogs must always be up for normal sewing.

* *Les griffes d'entraînement doivent toujours être relevées pour la couture normale.*

To Snap On and Snap Off the Presser Foot

壓腳的卸裝法

To snap off
卸除法

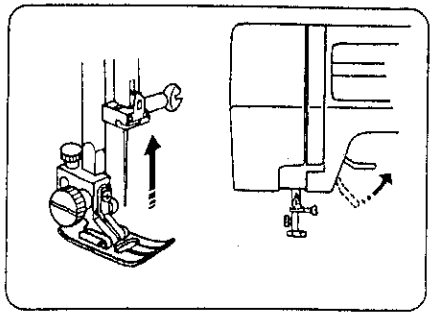

Turn the balance wheel toward you to raise the needle to its highest position. Raise the presser foot.

轉動天輪，使針的位置在上面，並提高壓腳升降桿。

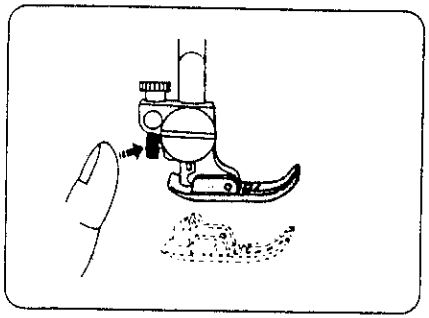

Press the red button on the back of the foot holder.
The presser foot will drop off.

按下壓腳座的紅色按鈕，取下壓腳。

To snap on
裝壓腳

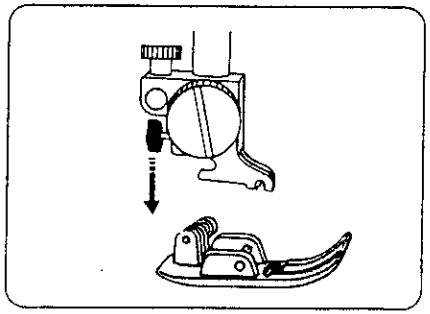

When attaching the presser foot, the pressure dial should always be at position "3". Place the presser foot so the pin on the foot lies just under the groove of the foot holder.
Lower the foot holder to lock the foot in place.

將壓腳的壓力調整爲"3"將壓腳的橫栓對準壓腳座上的溝槽，放下壓腳座，鉗鎖住壓腳。

≪Additional Clearance≫
《厚布料的放法》

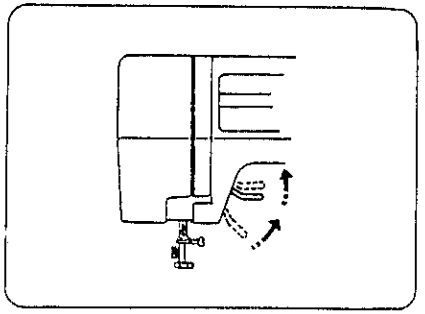

The presser foot can be raised higher for additional clearance.

壓腳在搬到上面時，還有再拉高的間隙。

To Detach and Attach the Foot Holder
壓腳座的裝卸法

che

To Detach
卸下

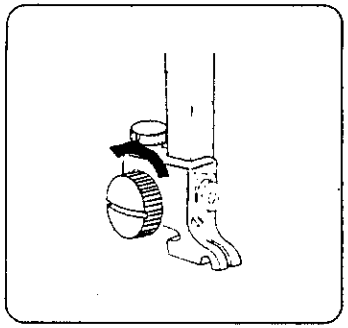

Remove the thumb screw by turning the screw counter-clockwise with the screwdriver.

用大的螺絲起子，把上圖的大螺絲往逆時針方向鬆開。

To Attach
安裝

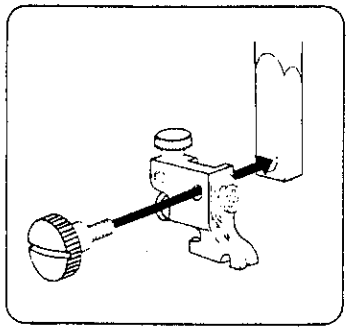

Align the hole in the foot holder with the threaded hole in the presser bar and fit the foot holder screw into the hole. Tighten the screw by turning it clockwise.

將壓腳座上的螺絲孔對準壓力桿上的洞，將螺絲依順時鐘的方向轉緊。

Reverse Stitch Button
回針桿

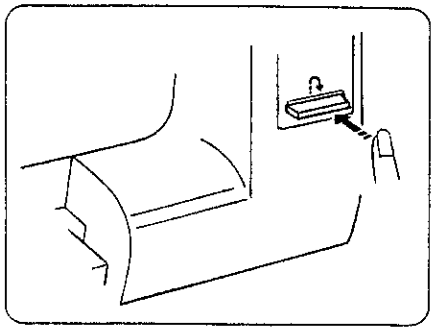

As long as you keep the reverse stitch button depressed, the machine sews backwards.

當你要加強縫製時，可壓下回針桿機器會自動回針。

Seam Guide Line
車縫引導線

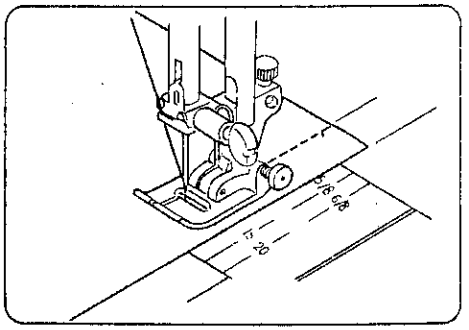

The numbers on the needle plate indicate the distance between the center needle position and the line.

The numbers in the front indicate in millimeters.
The numbers in the back indicate in inches.

這些針板上的號碼是從中間針位，算起的尺吋。前面的號碼是公釐，後面的號碼是英吋。

Changing Needle
車針換法

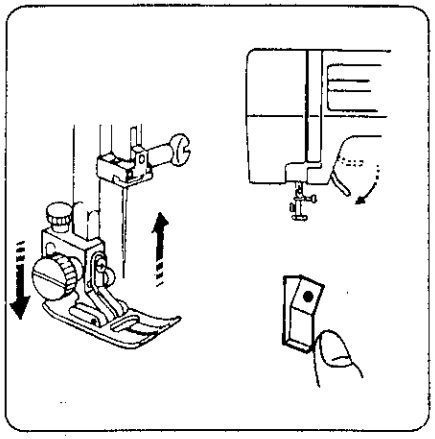

Raise the needle by turning the balance wheel toward you and lower the presser foot.
Turn off the power switch.

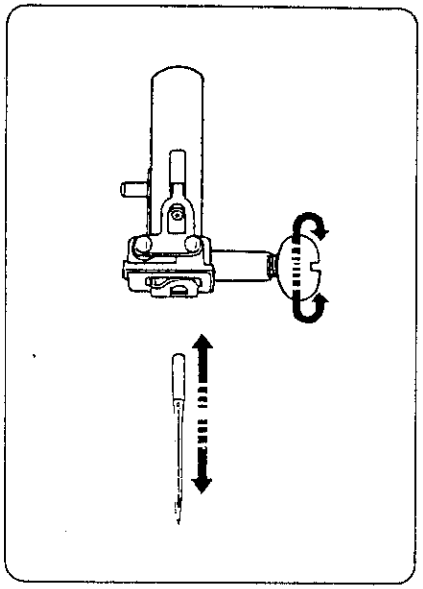

將壓腳放下，轉動天輪，使針的位置在最上面，並關掉電源。

Loosen the needle clamp screw by turning it counter-clockwise.

Remove the needle from the clamp.

Insert the new needle into the needle clamp with the flat side away from you.

When inserting the needle into the clamp, push it up as far as it will go and tighten the clamp screw firmly with the screwdriver.

* Check your needles frequently for barbed or blunted points. Snags and runs in knits, fine silks and silk-like fabrics are permanent and are almost always caused by a damaged needle.

車針固定螺絲轉向身前加以鬆開，並取下車針。

將新的車針平整面朝機器的後面，頂到最高點，然後轉緊鎖針螺絲即可。

★時常的檢查車針，鈍掉或磨損的車針容易損傷布料。

Thread and Needle Chart

	Fabrics	Threads	Needle Size
Light weight	Crepe de Chine, Voile Lawn, Organdy, Georgette, Tricot	Fine Silk Fine Cotton Fine Synthetic Fine Cotton Covered Polyester	9 or 11
Medium weight	Linens, Cotton, Pique, Serge, Double Knits, Percale	50 silk 50 to 80 Cotton 50 to 60 Synthetic Cotton Covered Polyester	11 or 14
Heavy weight	Denim, Tweed, Gabardine, Coating, Drapery and Upholstery Fabric	50 silk 40 to 50 Cotton 40 to 50 Synthetic Cotton Covered Polyester	14 or 16

- In general, fine threads and needles are used for sewing thin fabrics, and thicker threads and needles are used for sewing heavy fabrics. Always test thread and needle size on a small piece of fabric which will be used for actual sewing.
- Use the same thread for needle and bobbin.
- When sewing stretch, very fine fabrics and synthetics, use a BLUE TIPPED needle. The blue tipped needle effectively prevents skipped stitches.
- When sewing very fine fabrics, sew over a piece of paper to prevent yarn distortion.

車線與車針及厚薄布料的搭配

	布	線	針 號
薄布料	中國綢網，薄紗布 歐根紗，喬其紗，持利可得 ，精硫薄棉布	絲線 棉線 合織的線 T/C線	9 or 11
普通布料 中厚薄布料	雙面料 亞麻、棉、印花布	50號絲線 50～80號棉線 50～60纖線 T/C線	11 or 14
厚布料	牛仔布、斜紋布、軋划丁布	50號絲線 40～50號棉線 40～50號合織線 T/C線	14 or 16

★通常薄布細針，厚布用較粗的針，在正式車縫前，請先用碎布試車看看，確定車針、車線和布料是否適合。

★通常上線和下線的材質要一樣。

★車縫較薄的布料時，請用＂藍色針色針頭的針頭的車針，以防止跳針。

★當車縫較薄的布料時，可在下面墊一張紙，較不易起縐。

Winding the Bobbin
梭線的繞法

Horizontal Spool Pin
Pivot Horizontal

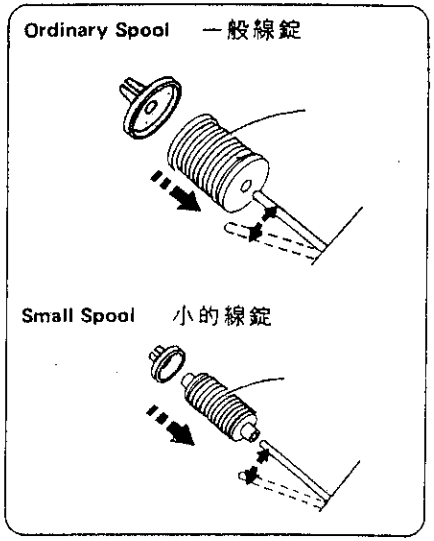

Lift up the spool pin. Place the spool of thread on the spool pin with the thread coming off the spool as shown.
Attach the large spool holder pressing it firmly against the thread spool.

* The small spool holder is used with narrow or small thread spools.

將線軸柱拉起，插入線，錠線的方向如上圖
★蓋上大的擋線盤
★當線快用完時，請改用小的擋線盤。

Additional Spool Pin
附加的線軸柱

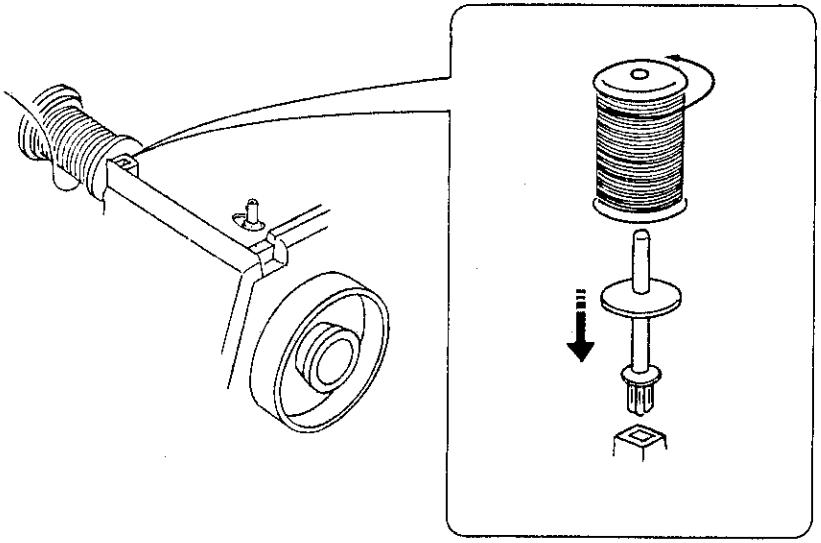

The additional spool pin is used to wind extra bobbins without unthreading the machine.
To use, insert the additional spool pin in the hole. Place the felt and the spool on the pin.

附加的線軸柱是使用於繞梭線時，不必把穿好的線拉掉。
使用時只需要把線軸柱插入如上圖的洞孔裡。
放下襯布及線錠即可。

Removing the Bobbin
取出梭子的方法

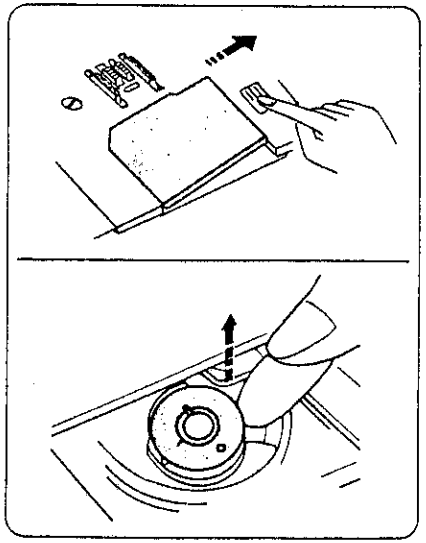

Gently slide the hook cover plate release button to the right, and remove the cover plate.

Lift out the bobbin.

輕輕的將梭線蓋的打開鈕，往右推即可將梭蓋打開。
往上取出梭子。

Threading the Bobbin Winder
繞底線的穿線說明

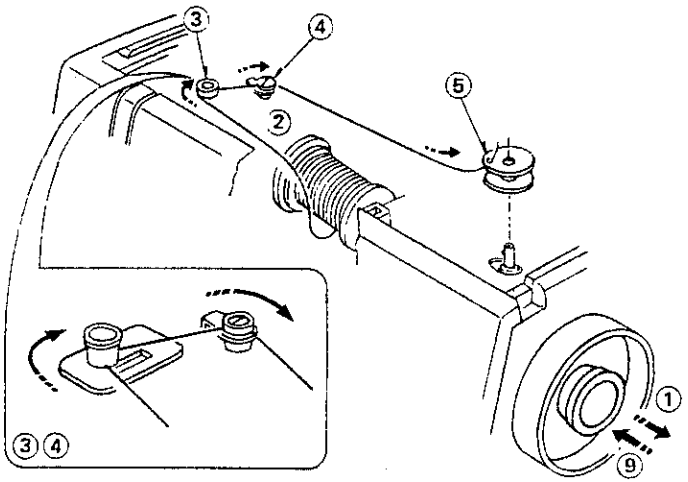

① Pull the clutch knob away from the machine to disengage clutch.

② Draw the thread from the spool.

③ Guide the thread around the thread guide.

④ Guide the thread around the bobbin winder thread guide.

⑤ Insert the thread through the hole in the bobbin, threading from the inside to the outside.

①拉出連軸旋鈕。

②拉出線端。

③依照虛線的指示圖穿線。

④依箭頭方向將線拉入。

⑤將線端由裡往外穿入梭子的小孔裡。

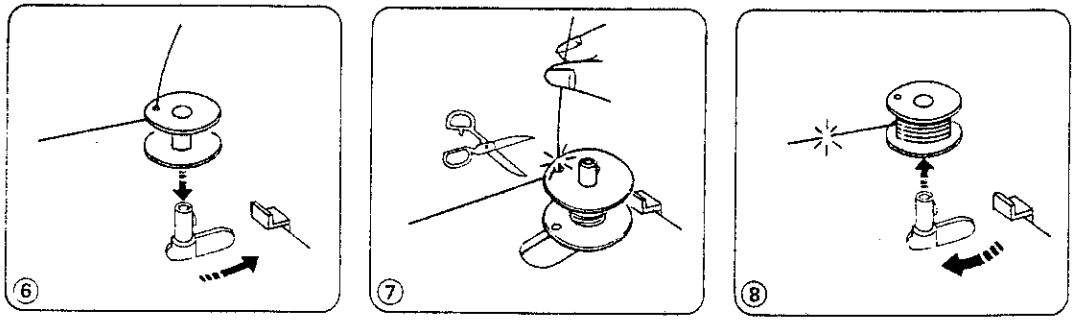

⑥ Put the bobbin on the bobbin winder spindle, and push it to the right.

⑦ With the free end of the thread held in your hand, depress the foot control.
Stop the machine when it has made a few turns, and cut the thread close to the hole in the bobbin. Depress the foot control again. When the bobbin is fully wound, it will stop automatically.

⑧ Return the bobbin winder to its original position by moving the spindle to the left, and cut the thread as shown.

⑨ Push in the clutch knob to engage clutch.
* The machine will not sew until the clutch knob is pushed in.

⑥將梭子按入卷線軸內，然後向右推。

⑦一手拉住線端，腳踩踏板。當線繞幾圈後，停止機器，將露在小洞外的線剪去，再踩踏板直到梭子的線滿，機器會自動停止。

⑧將卷線軸向左邊推回到原來的位置，將線如圖8剪掉。

⑨將連軸旋鈕向左推回原來位置。

★假如連軸旋鈕沒有推回原來位置，機器是不會動的。

Inserting the Bobbin
梭子的放法

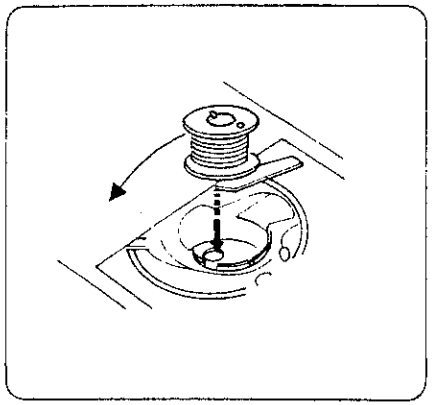

Place the bobbin in the bobbin holder with the thread running counter-clockwise.

將梭子線端以逆時鐘方向放入梭殼裡。

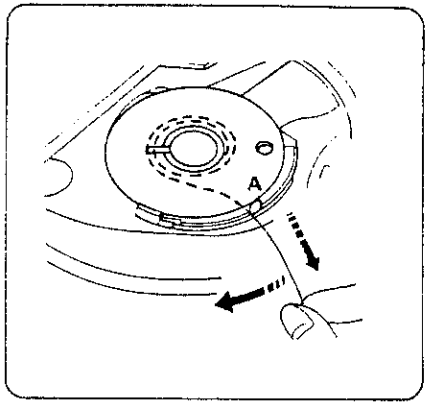

Guide the thread into the notch A on the front side of the bobbin holder. Draw the thread to the left sliding it between the tension spring blades.

將線如上圖所示，拉入梭殼前A槽內，再將線往左拉入張力彈簧片的中間。

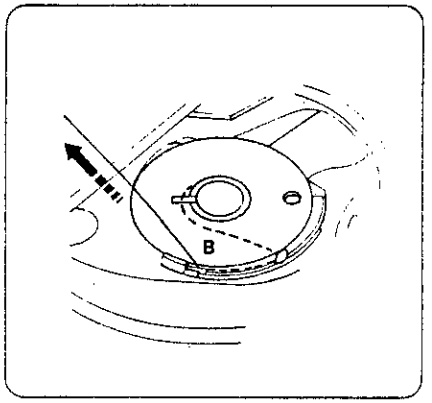

Continue to draw the thread lightly until the thread slips into notch B .

繼續將線拉入至如圖B的位置。

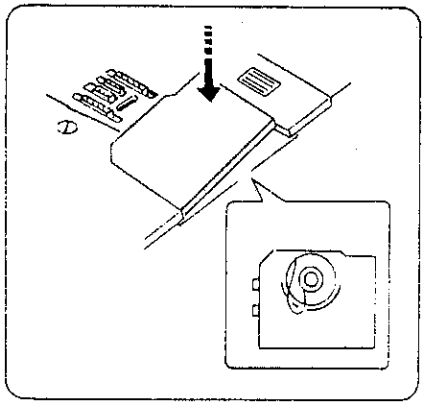

Pull out about 15 cm (6") of thread and attach the hook cover plate.

線端留出約15cm(6")並且蓋上梭蓋。

Threading the Machine
上線的穿線說明

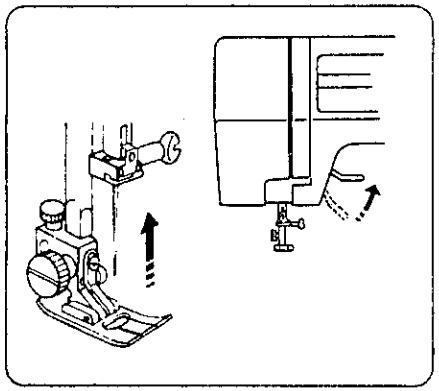

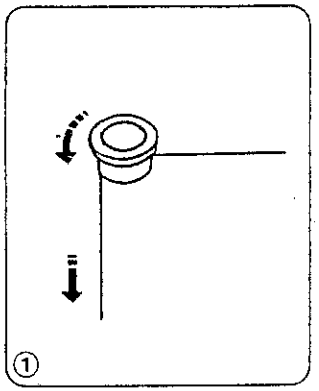

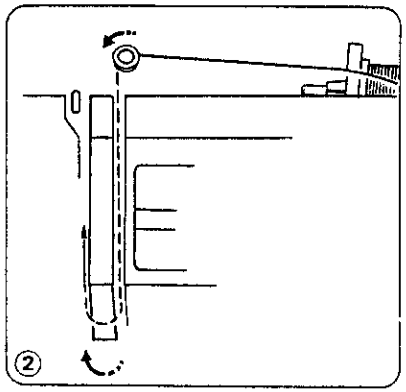

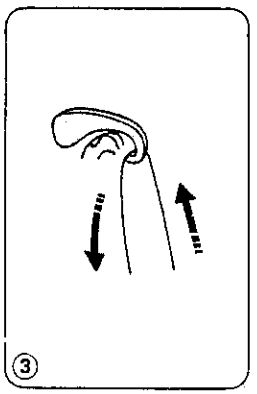

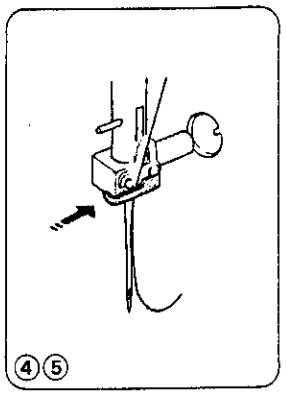

Raise take-up lever to its highest position by turning balance wheel toward you.
Raise the presser foot with the presser foot lifter and pass the thread in the order from ① to ⑤.

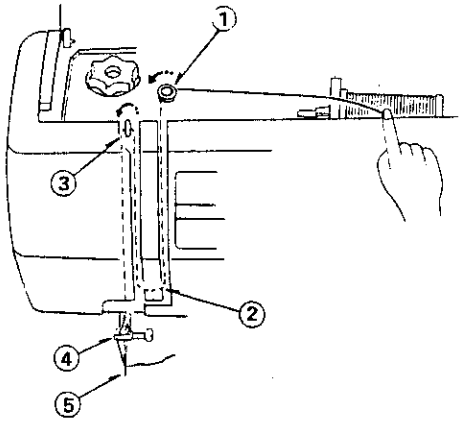

① Lead the thread from the spool and pass it through the thread guide. Then draw it down along the right slot.

② Guide the thread around the bottom of the thread guide plate from right to left, then draw it upward.

③ Firmly draw the thread from right to left over the take-up lever and down into the take-up lever eye. Then guide it down along the left slot.

④ Slide the thread from the left behind the needle bar thread guide.

⑤ Thread the needle by using the needle threader. (See page 19.)

搬起壓腳升降桿，並轉動天輪，使針的位置在最高點。
按①～⑤的順序穿線。

①將線如圖指示的方向，穿入導線板裡。

②將線由右到左如圖②的方式由下到上的導入引導器裡

③把線由右到左的如圖③指示穿入天平裡

④把線從針架的左側拉入

⑤穿針的方法請參考 19 頁

Needle Threader
穿線器的操作說明

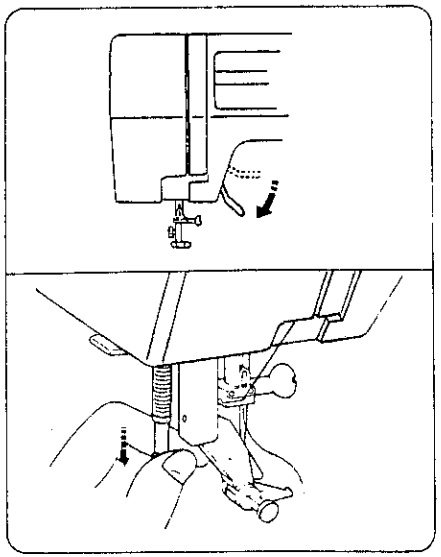

Pull out 15 cm (6") of thread. Turn the balance wheel toward you to raise the needle to its highest position. Lower the presser foot.

Pull the needle threader knob down as far as it will go.

將壓腳放下轉動天輪，使針的位置在最上面拉出線端的15cm(6")

拉下穿線器到最低處使其對準針的位置。

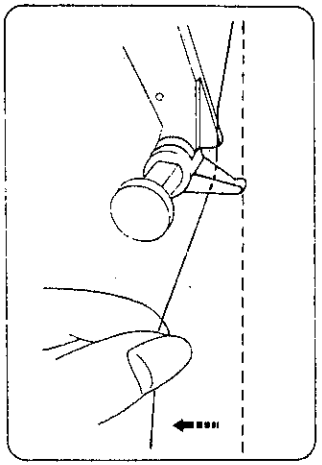

Pass the thread between the finger and the triangle as illustrated.

如上圖所示，將線拉向經由兩個三角板的中間經過。

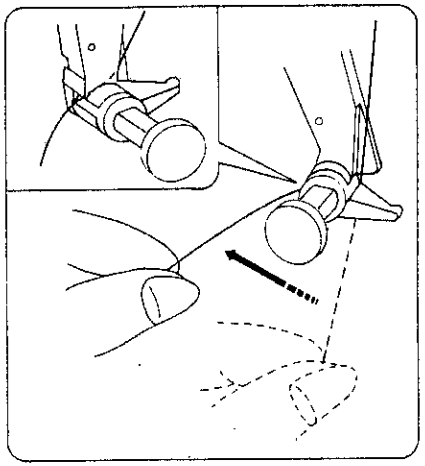

Draw the thread to the left into the groove.

把線端往左邊拉，使其如上圖所示的進入溝槽。

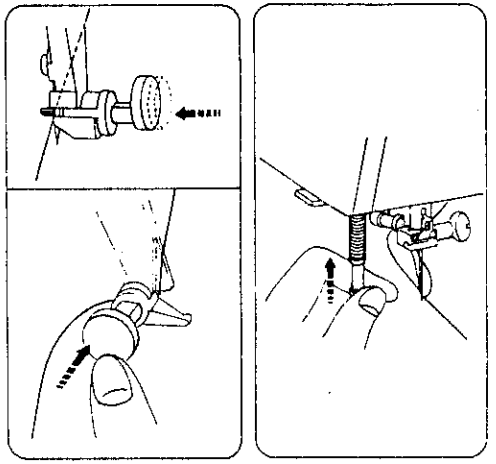

Gently push the button.

The pin will push the thread through the needle eye forming a loop. If the pin does not go through the needle hole, reposition the threader.

Raise the knob slowly.

Pull the free end of thread through the needle hole.

* The needle threader can be used with number 11, 14, 16, and blue tipped needle.

輕推黑色按鈕。

前面的穿線器就會把線推過針孔形成線圈，如果推按鈕時有阻力線不能穿過針眼，不可用力硬壓，應重新確認穿線器的位置。

把穿線器慢慢的推回到原來的位置。

★穿線器能使用的針的號碼是：#11、#14、#16的針。

Drawing Up Bobbin Thread
吊底線的方法

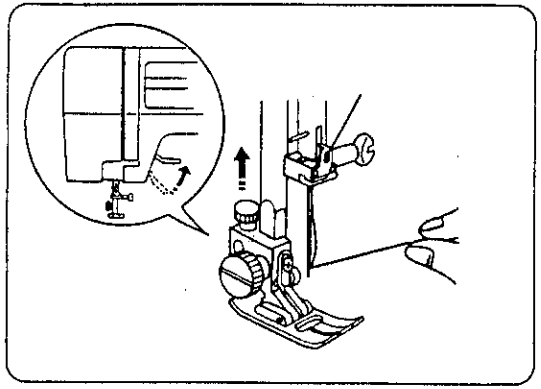

① Raise the presser foot and hold the needle thread lightly with your left hand.

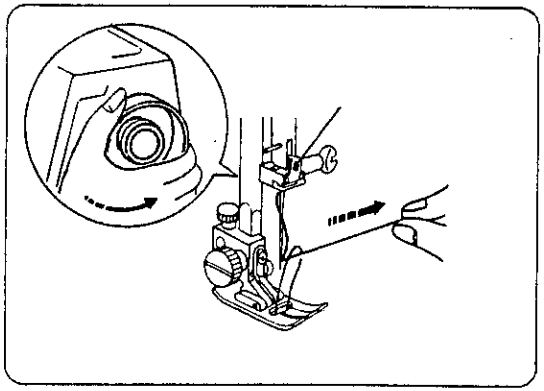

② Turn the balance wheel slowly towards you with your right hand until the needle goes down and continue turning balance wheel until the take-up lever is at its highest position. Lightly draw up the needle thread forming a loop of the bobbin thread.

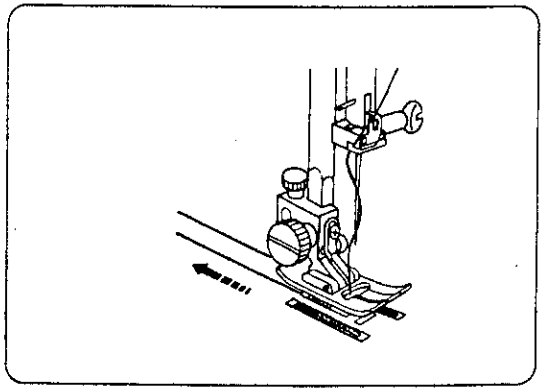

③ Pull 15 cm (6") of both threads back and under the presser foot.

---

①搬起壓腳升降桿，並用左手拉住線端(不可太緊)

②用右手慢慢的轉動天輪，使車針下降後再上升到最高點時，輕拉上線就可使下線圈拉出。

③將上、下線從壓布腳下面拉出約 15cm(6") 於機器後面，並使之一致。

Balancing Needle Thread Tension
上線張力的調整

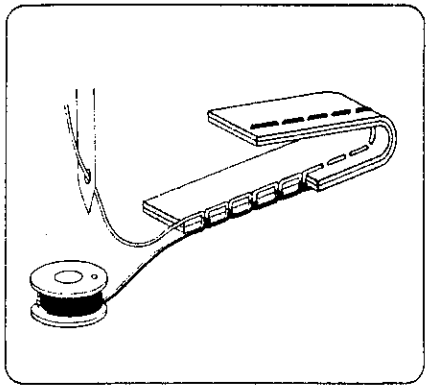

The needle thread and the bobbin thread should interlock in the center of two layers of fabric in straight seams.

正確的線跡：上線和底線交織在布的中央。

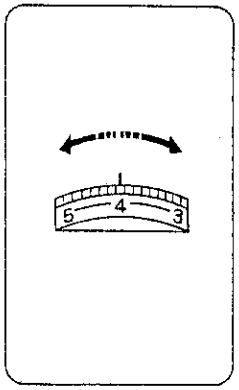

Set the desired number of the thread tension dial at setting mark.

將你所需的線的張力對準刻度。

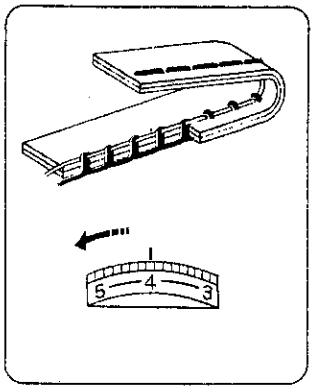

Loosen the needle thread tension by moving the dial to a lower number.

如上圖上線太緊時，向左轉動張力器到較小的數目字，使上線放鬆。

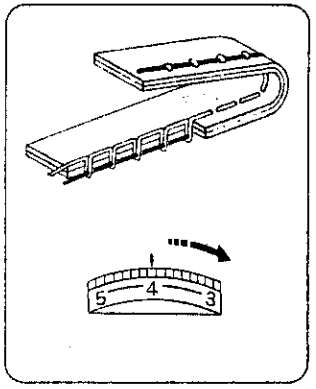

Tighten the needle thread tension by moving the dial to a higher number.

如上圖上線張力太鬆時，向右轉動張力器，到較大的數目字，使上線調緊。

Thread Tension for Zigzag Sewing
鋸齒縫法之線的鬆緊。

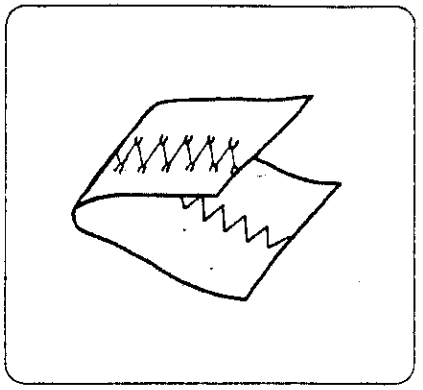

To obtain better zigzag stitches, the needle thread tension should be slightly weaker than in the case of straight sewing. The needle thread should appear slightly on the reverse side of the fabric.

鋸齒縫法之正確線跡是將上線線跡略出現在布的反面爲標準。

Pattern Selector Dial
花樣的選擇

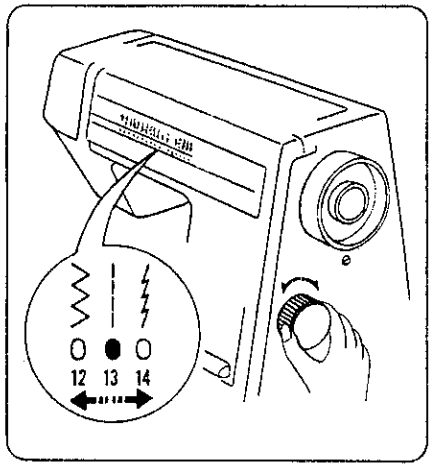

Select the pattern by turning the pattern selector dial and the red signal (LED) shows the selected pattern.

* Raise the needle above the fabrics and presser foot when you turn the pattern selector dial.

轉動花紋選擇刻度盤，使紅色信號對合您所需的花紋。

★當要轉動花紋選擇刻度盤時，請將針的位置提到最高點。

Zigzag Width Control
寬度控制鈕

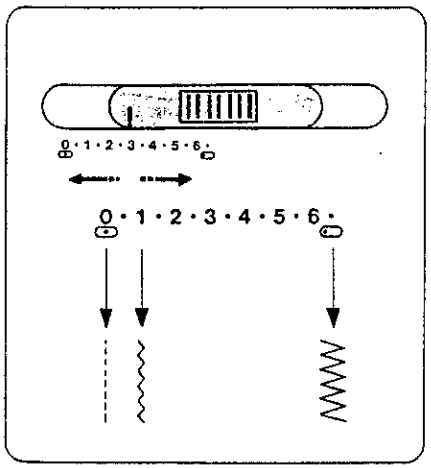

Higher the number, wider the stitch width.

This machine will sew the maximum 6.5 mm (0.25") wide zigzag.

* Raise the needle above the fabrics when you set the stitch width.

數字愈大，寬度愈寬。

此台機器的花紋寬度最寬是6.5mm(1/4")
當你要選擇所需的寬度時，請將針的位置提到最高點。

Stitch Length Control
密度控制鈕

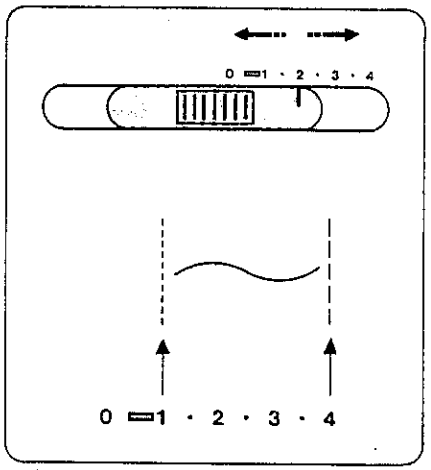

The higher the number, the longer the stitch length. You can select the suitable stitch length for fabrics that you plan to sew.

Note:
Stitch length is automatically set for stretch stitch patterns on pattern number 14 to 18.

數字愈大，針距愈長。你可依您布料的厚薄來選擇針距。
注意：
14～18個圖案的針距是自動控制您不需調整。

Infinite Needle Position
針位的選擇

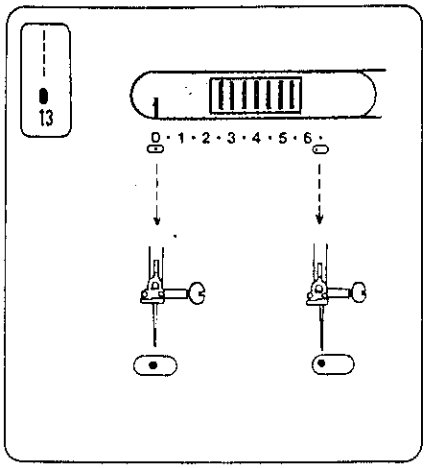

When pattern number 13 is selected and the stitch width control is activated, you can move the needle between center and left needle positions.

當圖案是13時，寬度控制鈕是控制針的位置，它可在中間和左邊之間往返。

Straight Stitch Sewing
直線的縫法

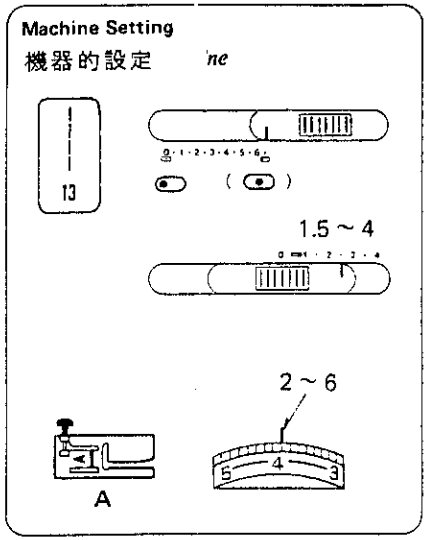

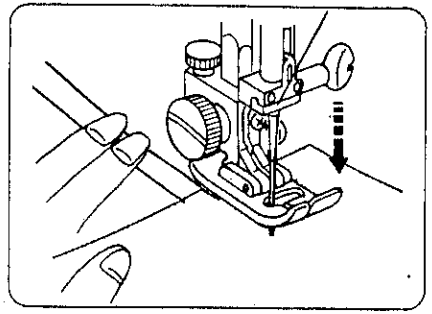

Raise the presser foot and position the fabric next to a stitching guide line on the needle plate.

Lower the presser foot and smooth the threads toward the back. Depress the foot control.

Gently guide the fabric along the guide line letting the fabric feed naturally.

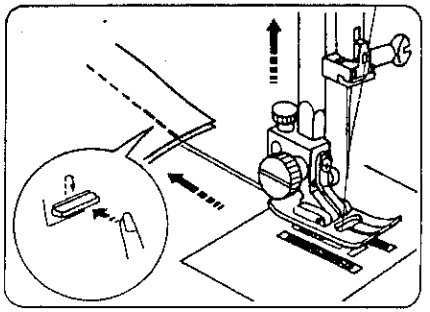

For fastening the ends of seams, press the reverse stitch button and sew several reverse stitches.

Raise the presser foot and remove the fabric, drawing the threads to the back.

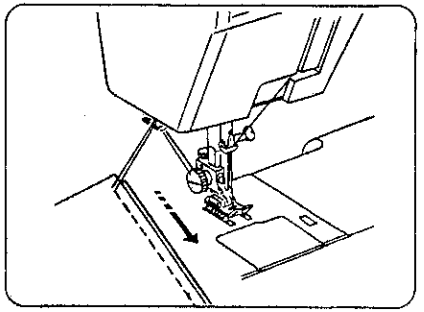

The threads are cut the proper length for starting the next seam.

提昇壓腳，放入布料剛好在針板上，引導線的邊緣。放下壓腳，並將線端朝後，輕踩踏板。

把布扶正使布邊靠著引導線的邊線，讓其慢慢的車縫。

爲了使其更牢固，當車縫結束時，壓下回針桿，使其倒退車縫幾針，提升壓腳並移動布料把線拉向後面。

爲了下一次車縫的方便，請把線端拉到切線處割斷，並留下適當的長度。

Changing the Sewing Directions
縫製方向的轉換法

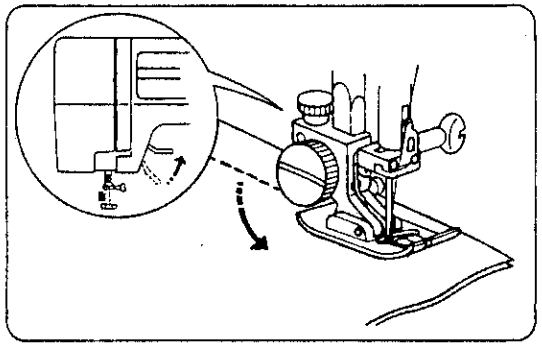

Stop the machine and turn the balance wheel toward you to bring the needle down into the fabrics.
Raise the presser foot.

Pivot the fabric around the needle to change sewing direction as desired.
Lower the presser foot.

停住縫衣機，把針的位置停留在下面提昇壓腳。

轉動布料，使縫製方向改變，再放下壓布腳即可繼續車縫。

Straight Stitching on Heavy Fabrics
厚布料的縫製法

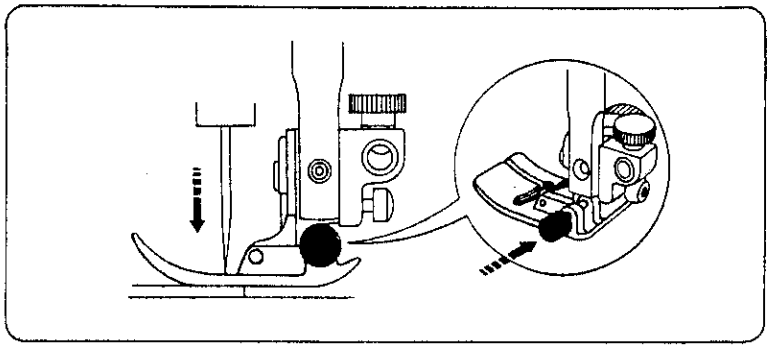

Lower the needle into the fabric at the point where you wish to start sewing. Press the small black button on the zigzag foot with your left hand to "lock" the presser foot to the fabric.

Lower the presser foot with your right hand, keeping pressure on the black button with your left hand.

Release the black button and start sewing.

針插入起縫的位置，提高壓腳升降桿到最高點，利用右手小指，把A壓腳上的黑色按鈕壓入左邊，並同時放下壓腳升降桿，即可開始車縫。

當妳開始車縫後，黑色按鈕會自動彈回。

UTILITY STITCHING 可運用的車縫法

Zigzag Stitching
鋸齒狀縫製法

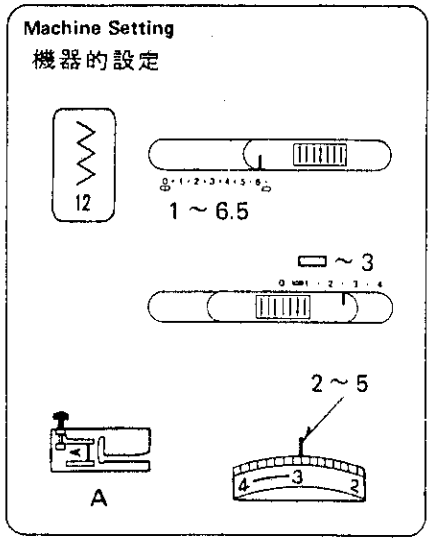

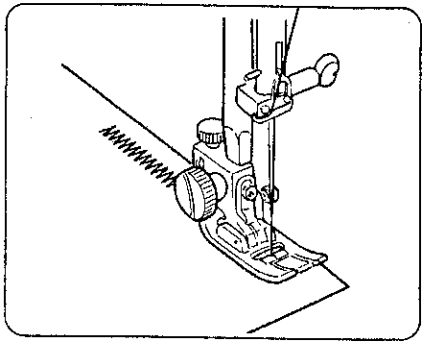

Simple zigzag stitching is widely used for overcasting, appliqueing, sewing on buttons etc.

簡單的鋸齒縫是廣泛的被運用在車布邊、貼布繡、釘鈕子等。

Overcasting
布邊的車縫法

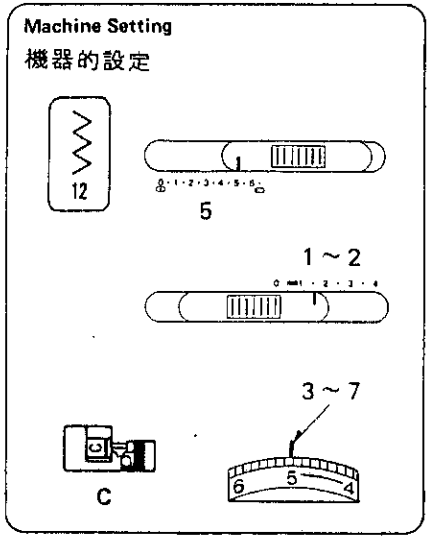

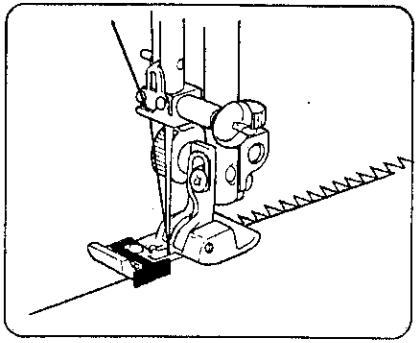

This type of stitch is used on the seam allowance to prevent fabrics from fraying at raw edges.
It can be used to finish a hem edge.
Place the edge of the fabric next to the black prong of foot C .

布邊靠著黑鐵片的邊緣車縫。

Overedge Stitch
布邊縫法

Machine Setting
機器的設定

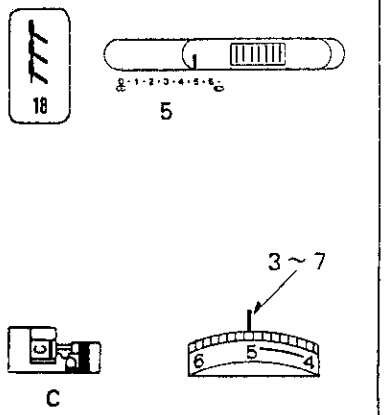

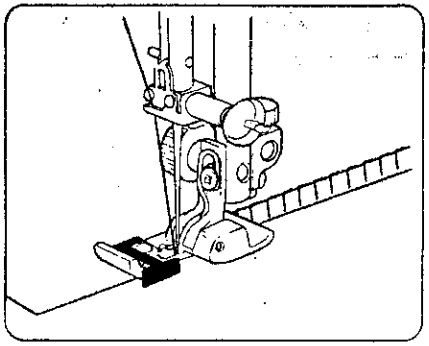

Place the edge of the fabric next to the black prong of foot.
The wires on this foot prevent light weight fabric from rolling and creating a ridge. The black prong guides your sewing so the needle falls off the fabric wrapping the threads around the edge to stop raveling.

布邊靠著黑鐵片的邊緣車縫。

Tricot Stitch
針織布料的布邊車縫法

Machine Setting
Réglage de la Machine

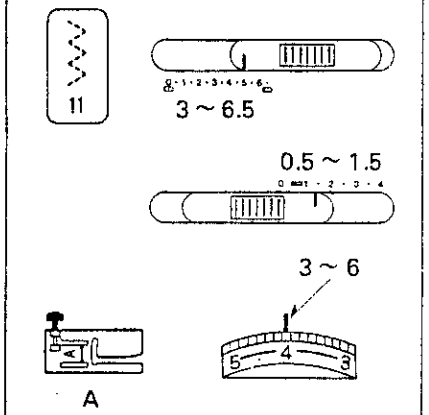

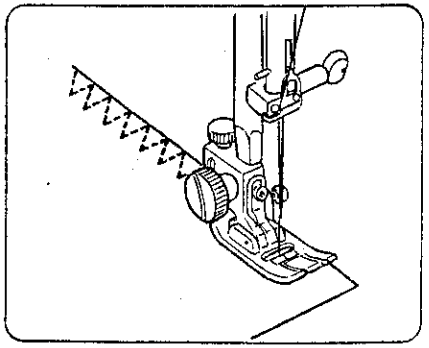

Place the fabric under the presser foot so that the edge will be slightly inside the right hand side of the presser foot. Guide the work so the right hand stitches fall at the edge of the fabric.

用於易鬆脫之布料和伸縮布料的車布邊，可防止布料捲起。

布邊靠著壓腳的邊緣車縫。

Triple Strength Stitch
直線三重縫法

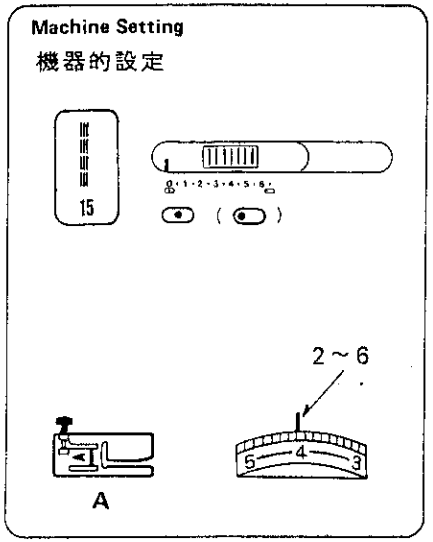

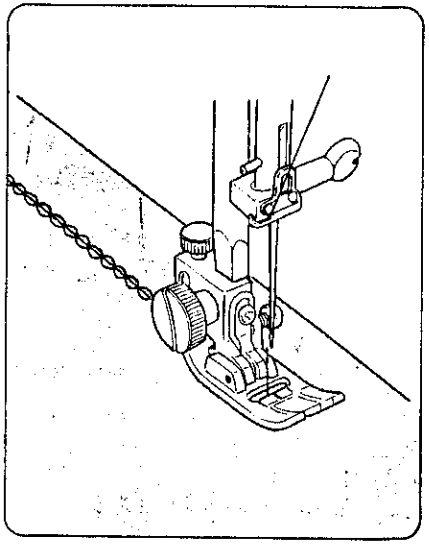

This strong, durable stitch is recommended where both elasticity and strength are needed to insure comfort and durability.

Use it to reinforce areas such as crotch and armhole seams.

Also use when constructing items such as backpacks for extra strength.

The stitch is sewn with two stitches forward and one stitch backward forming a seam that does not rip easily.

Garments should be basted for fitting before seaming.

此圖案的車法是前進一針，後退一針再前進一針，以造成較牢固的針目，使用法有：

1．用於牛仔布、較厚之布料的裝飾縫或加強縫製用。布料分前後，注意保持縫眼的整齊。
2．袖襯底部（腋下）及擺襠部份的加強縫合。

Outline Stretch Stitch
伸縮布的車縫法

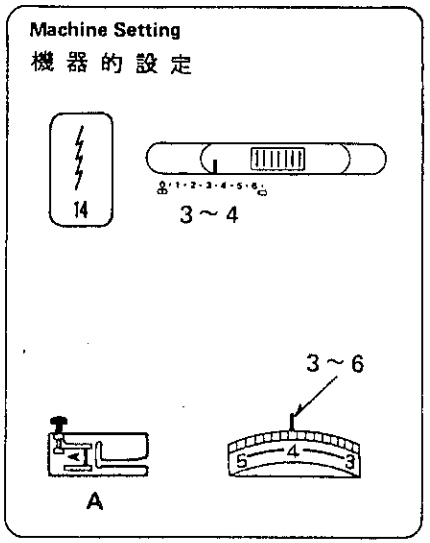

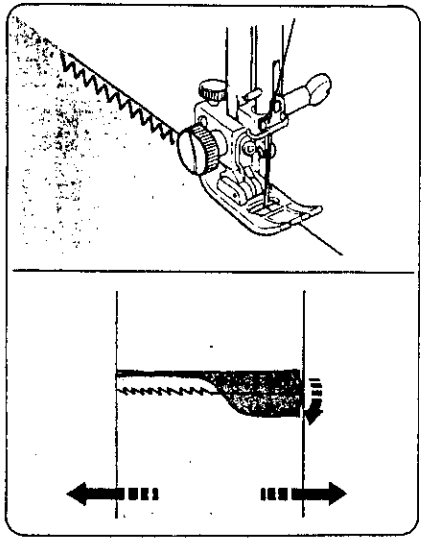

Pattern 14 is a narrow stretch stitch designed to eliminate puckering on knit fabrics and bias seams, while permitting the seam to be pressed completely flat.

For a 1.5 cm (5/8") seams, use the 2 cm (6/8") marking on the needle plate.

When sewing light weight fabrics, set the pressure dial at "1" or "2".

第14個圖案是一種較窄的伸縮性針目，可用於伸縮性布料的縫合以避免產生縐褶。

可將布邊對齊針板上2cm或6/8"的位置車縫，如此車縫時，縫份是2cm

Sewing Buttons
釘釦子的方法

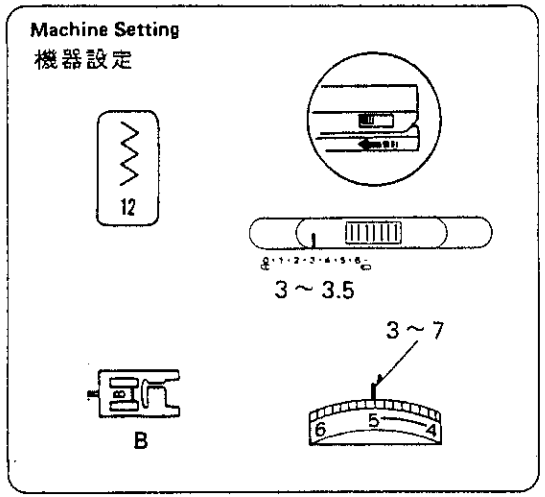

Tape the button over the placement mark.
A pin can be placed on top of the foot to form a shank. Before lowering the foot, test the needle swing making sure the needle drops in each hole. Adjust the stitch width if necessary. Lower the foot.

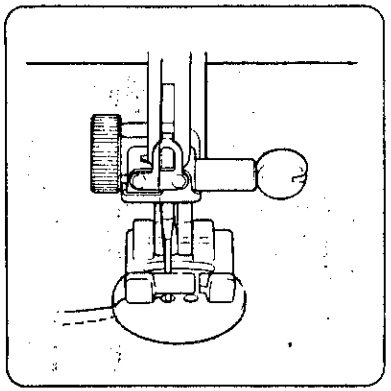

Align the both holes of button with the needle swing, lower the foot and depress the foot control.

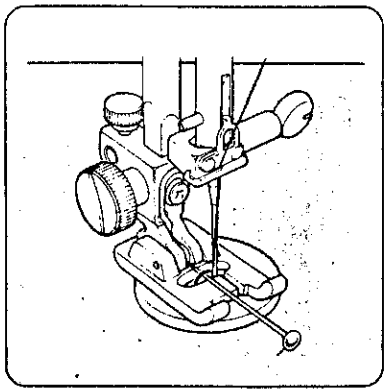

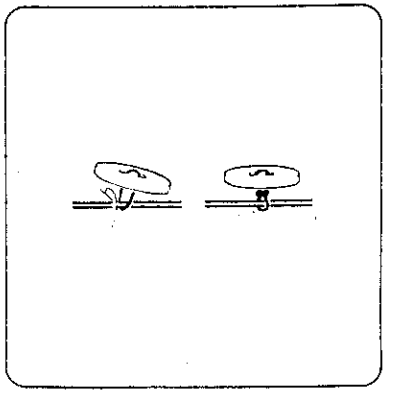

To strengthen the shank, cut the threads leaving a 20 cm (8") tail. Bring the needle thread down through the hole in the button and wind it around the shank.
Draw the thread to the wrong side and knot.

* When button sewing is finished, return the drop feed lever.

將釦子用膠帶粘在你要釘釦子的位置上，假如您要使釦子下面的釘縫線較長一點，而形成線軸，可在壓腳上放一根針。先用手轉動天輪試試看車針的落針位置是否正確的對準釦上的洞若沒有可調整位置使針的位置剛好落在釦洞的位置再車縫。

針位對準左側扣洞，放下壓腳及放低送布齒。

爲了加強縫好的線軸強度，留20cm長的尾線，把它拉到布與釦子的中間，纏繞線軸並扣緊。最後把線拉到布的反面打結。

★當釦子釘完後，記得把送布齒還原。

Automatic Buttonhole
自動開釦孔

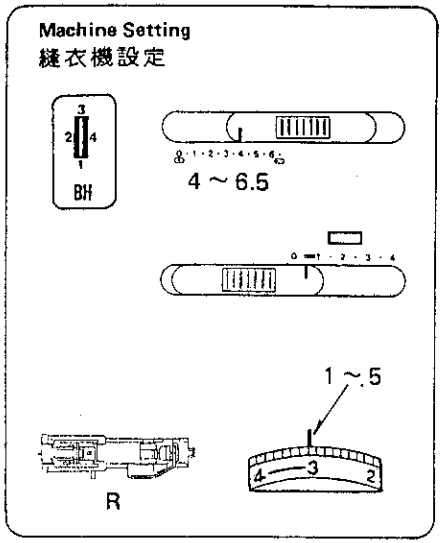

* The size of buttonhole is automatically set by placing the button in the automatic buttonhole foot (R).
* The button holder of the foot takes a button size up to 2.5 cm (1") in diameter.
* Make a test buttonhole on a sample duplicating the fabric, interfacing and seams of the actual garment.
* Place the button on the fabric sample and mark the top and bottom to determine the position of buttonhole.
* Use the interfacing on the stretch fabrics.

★把鈕釦放置在R壓腳上，釦孔的大小可自動設定，R壓腳最大可放直徑2.5 cm的鈕釦。
★先用碎布試縫，確定正確後再正式車縫。
★伸縮性的布料要先貼襯才能縫製。

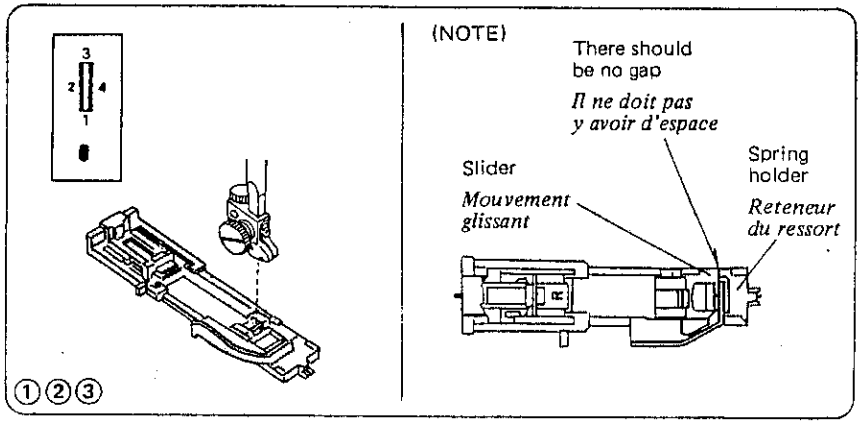

① Turn the balance wheel toward you to raise the needle to its highest position. Raise the presser foot lifter.

② Set the pattern indicator at "BH" by turning the pattern selector dial.

* If the indicator light is already on at "BH", reset the machine in accordance with the instructions on page 31.

③ Attach the automatic buttonhole foot (R).

NOTE: There should be no gap between the slider and spring holder of the foot as shown above.

①把車針轉到最高點，提高押腳昇降桿。
②花盤設定在〝BH〞如果花盤已設定在BH請參考31頁的說明，重新設定。
③裝上R壓腳。
注意：如上圖滑板與壓腳彈簧座間不可有間隙。

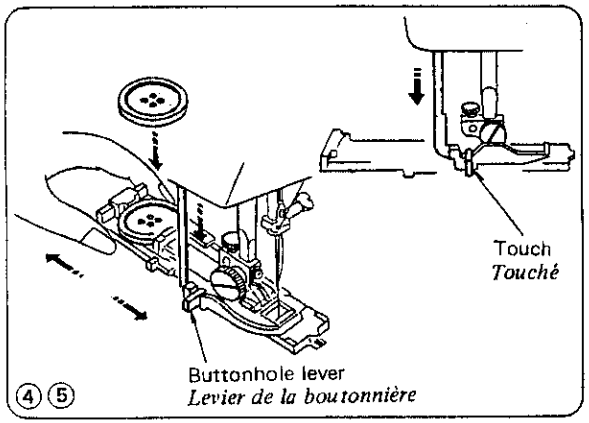

④ Pull the button holder to the back, and place the button in it. Push back the button holder toward you as far as it will go.

⑤ Pull the buttonhole lever downward as far as it will go.

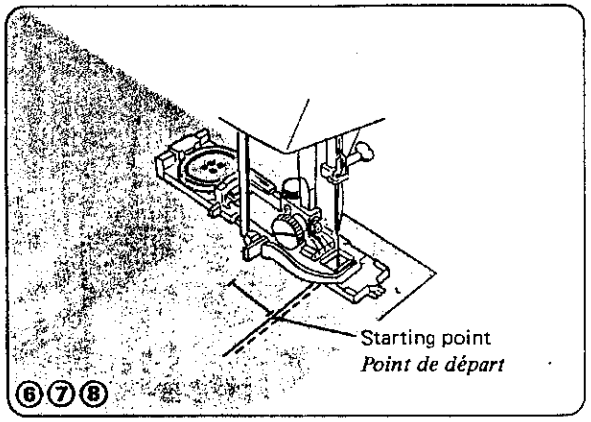

⑥ Insert fabric under the foot.
Turn the balance wheel slowly towards you with your right hand until the needle goes down and continue turning balance wheel until the take-up lever is at its highest position.

⑦ Remove the fabric to the left to draw both threads to the left.

⑧ Insert the garment under the foot, and lower the needle at the starting point. Then lower the automatic buttonhole foot.

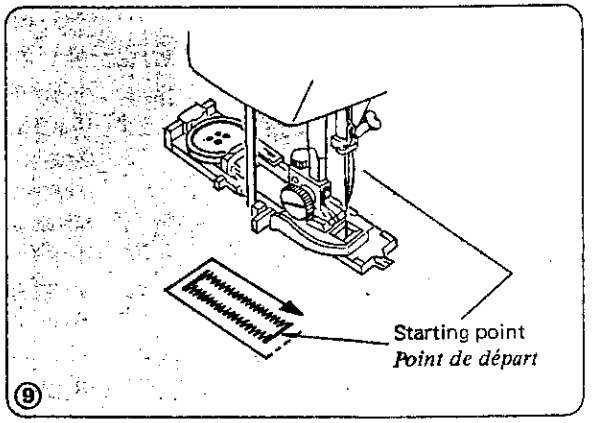

⑨ Sew slowly and stop the machine at the starting point when a buttonhole is completed.

* The front bartack and left row first, then the back bartack and right row.

---

④將鈕釦座後拉放上鈕釦。

⑤拉下鈕孔桿。

⑥將布放在壓腳下。

⑦將布及上下線拉到左邊。

⑧把針降低到起始點放下壓腳。

⑨慢慢的由起始點向左車，向上車，再向右車，再回到起始點即完成。

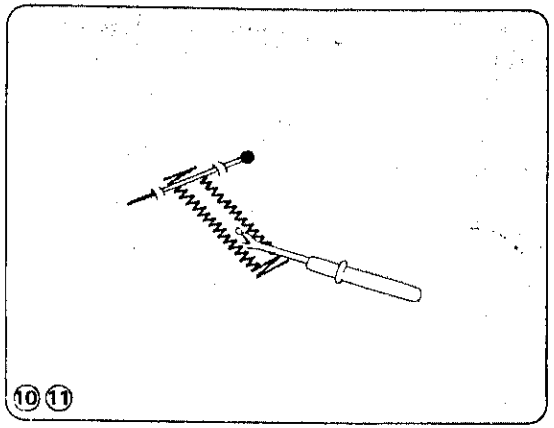

⑩⑪

⑩ Cut the both needle and bobbin threads leaving about 10 cm (4") thread ends. Draw the needle thread to wrong side of fabric by pulling the bobbin thread. Then, knot the threads.

⑪ Insert a pin inside the bartack.
Then cut the opening with a seam ripper.
Take care not to cut the stitches.

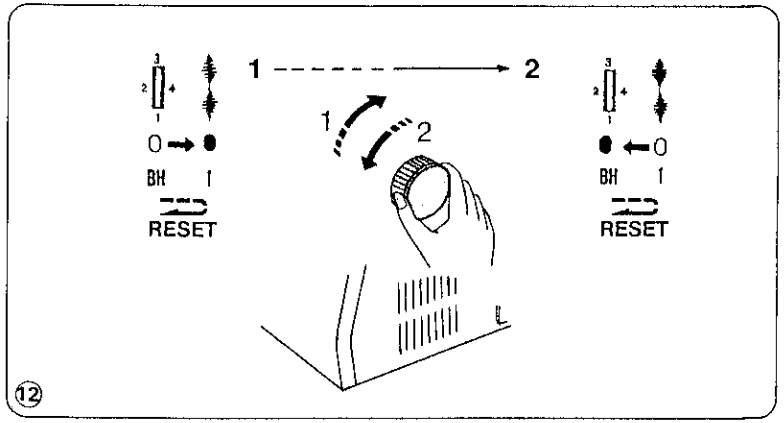

⑫

⑫ **To repeat buttonhole sewing.**
After a buttonhole is sewn, move the indicator to pattern "1" ( ) by turning the pattern selector dial in the direction of arrow 1, then return the indicator back to "BH" by turning the dial in the direction of arrow 2 to reset for sewing the next buttonhole.

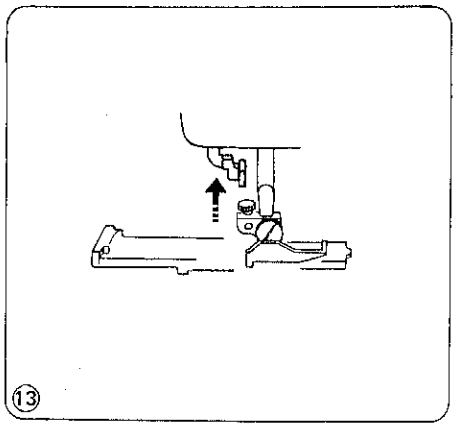

⑬

⑬ When buttonhole sewing is finished, push the buttonhole lever upward as far as it will go.

---

⑩剪斷上下線，將上線拉到布的反面打結。
⑪用拆線器切開釦孔。

⑫重覆開鈕孔。開完一個釦孔後，將花盤右轉到1，再左轉回「BH」位置（如上圖）。

⑬釦孔完成後，將鈕孔桿提高回復原位。

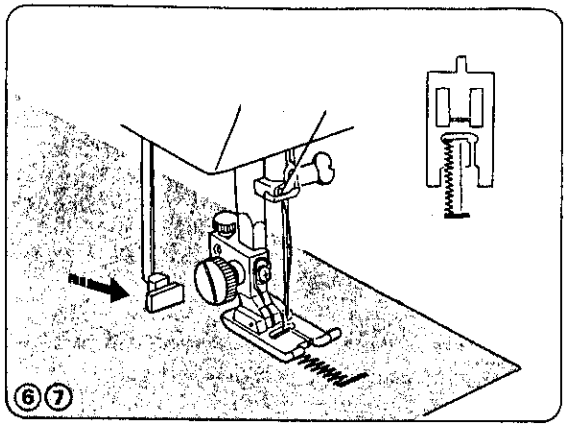

⑥ Sew the front bartack and left row, then stop the machine after sewing the desired total length of buttonhole.

⑦ Pull the buttonhole lever toward you.

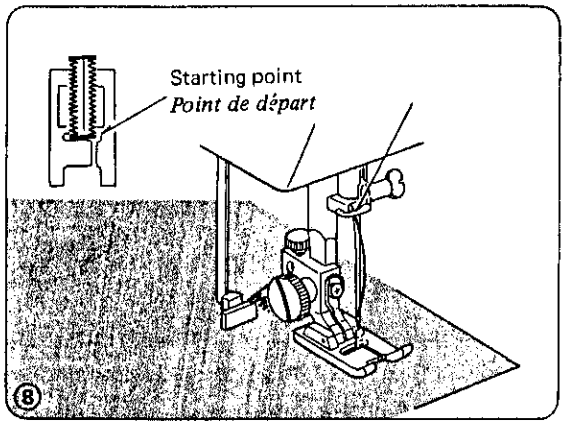

⑧ Sew the back bartack and right row, then stop the machine at the starting point.

* To cut the opening and to reset for sewing the next buttonhole, refer to the instructions on page 31.

---

⑥先車前面的橫線和左列，當車到你所需要的釦孔長度時，停止機器把鈕孔桿朝機器的前面輕推一下。

⑧到始點處（結束點）鎖針。
★剪開釦洞及開第二個扣洞的方法請參考31頁。

Zipper Application
拉鍊的車縫法

Machine Setting
Réglage de la Machine

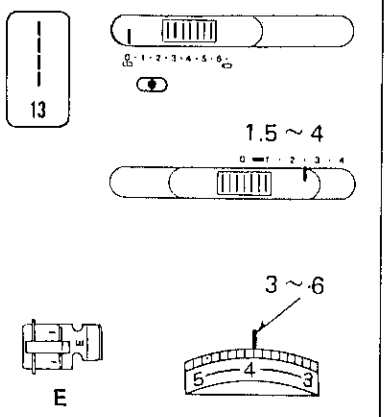

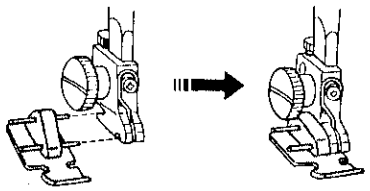

To sew the left side of the zipper, attach the zipper foot to the pin on the right hand side.

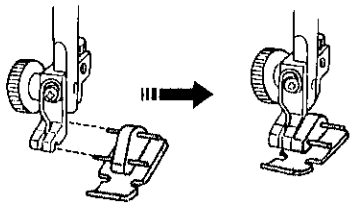

To sew the right side of the zipper, attach the zipper foot to the pin on the left hand side.

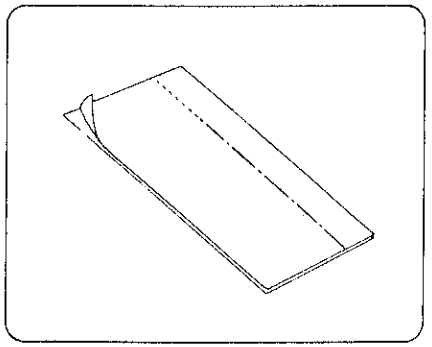

Fabric Preparation:

Place right sides of fabric together and sew to the end of the zipper opening. Reverse stitch to knot the stitches. Sew the zipper opening with a basting stitch.

車縫左邊的拉鍊時，壓腳裝在左邊的連接橫桿。

車縫右邊的拉鍊時，壓腳裝在左邊的連接橫桿。

布的準備工作。

把布料的正面相對，在欲上拉鍊的位置處假縫（針距用4"）在拉鍊開口止處回針縫（較不易裂開）。

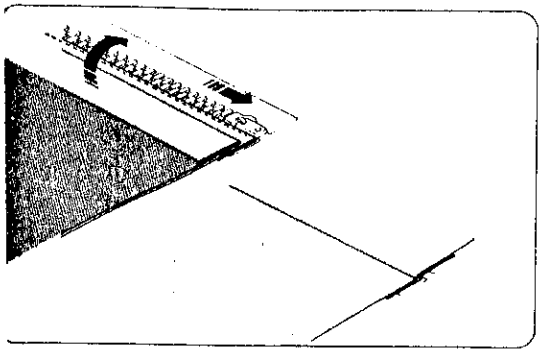

Close the zipper and spread the fabric flat with the right side facing up.

將拉鍊拉起，並把左邊的布翻到右邊，使正面向上。

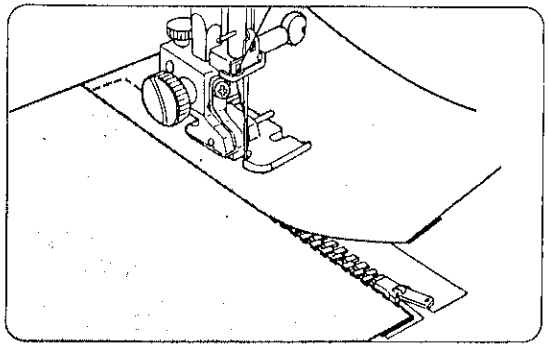

Move the zipper foot to the left pin. Guide the edge of the foot along the zipper teeth and stitch through garment and zipper tape. Stop about 5 cm (2") from the top of the zipper.

把拉鍊壓腳換裝到左邊，依上圖的縫法車縫到距拉鍊頭5cm處(2")停止。

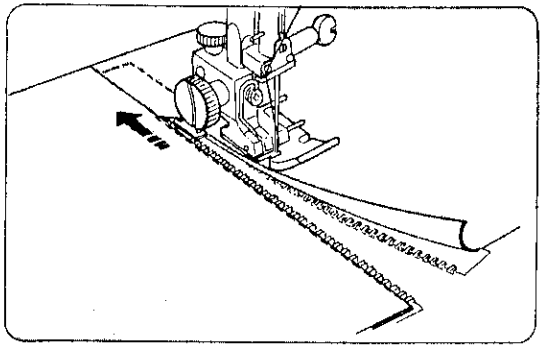

With the needle down in the fabric, raise the foot, remove the basting stitches and open the zipper. Then lower the foot and stitch the remainder of the seam making sure the fold is even.

把針固定到布中，並將壓腳提起，拉鍊拉開到已車縫的部份，再把壓腳放下，車縫未完成的部份，並檢查確定布是否平整。

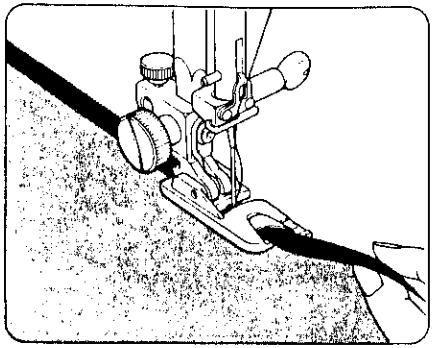

Lower the hemmer foot, then sew by lifting up the edge of the fabric to keep it feeding smoothly and evenly.

放下壓腳，把布提往左邊，順著捲邊壓腳的左側將布料平順的送入喇叭裡。

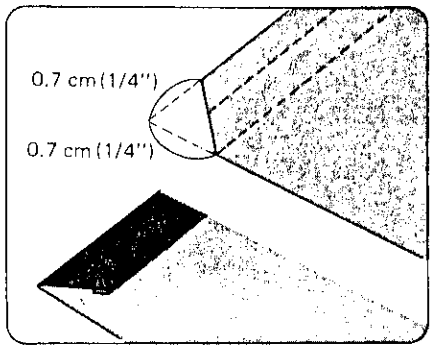

Trim about 0.7 cm (1/4") from corners as illustrated, to reduce bulk.

如上圖所示，把布端的邊角修掉0.7公分，以減少厚度。

DECORATIVE STITCHING 裝飾圖案的車縫法

Decorative Satin Stitch Patterns
裝飾花紋的車法

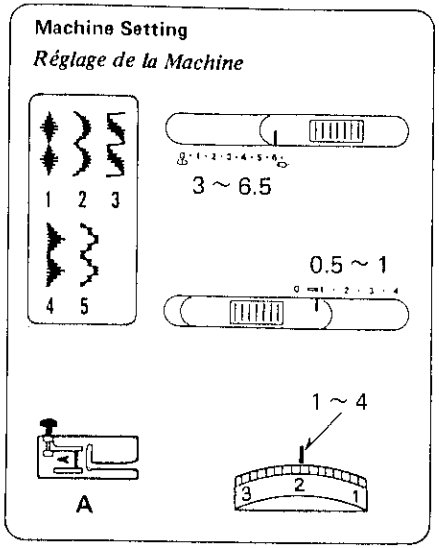

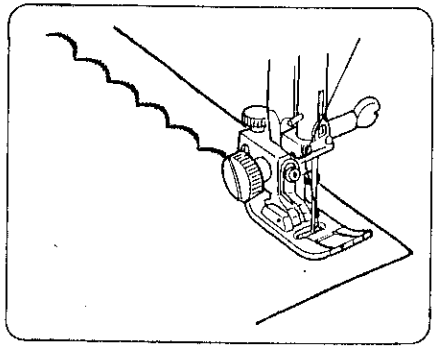

Sew a row of stitches and adjust the thread tension so the needle thread should appear on the reverse side of the fabric.
Test the stitch on the actual fabric for the best results.

Stretch Stitch Patterns
伸縮性布料的裝飾縫法

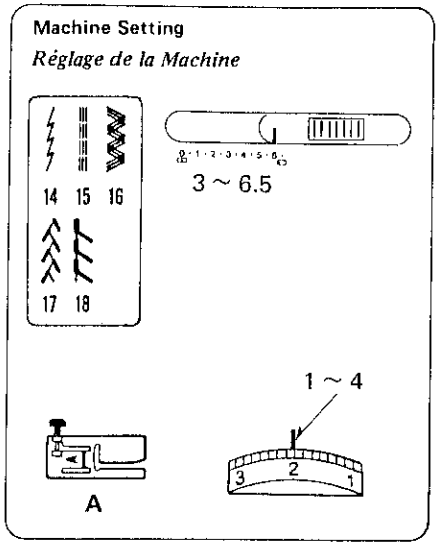

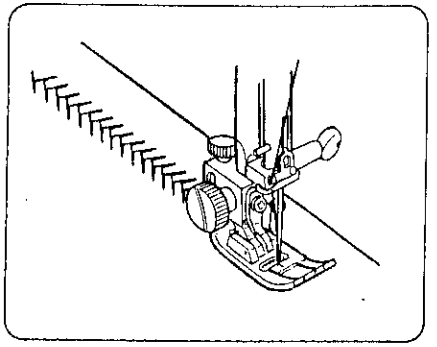

Stitch length of the automatic patterns (No. 14 to 18) are preset, so you need not select the stitch length for these patterns.

---

1. 針距不要調太密，否則會無法送布要正式車縫前，請先試車調整針距。

2. 若布料起皺時，下面可墊紙或燙襯縫製即可保持平整。

14～18花樣密度是自動調整的，所以在選擇這些圖案時，密度（針距）不需再去調整控制它。

Quilting

(平行線縫法)(棉被縫)

Machine Setting

Réglage de la Machine

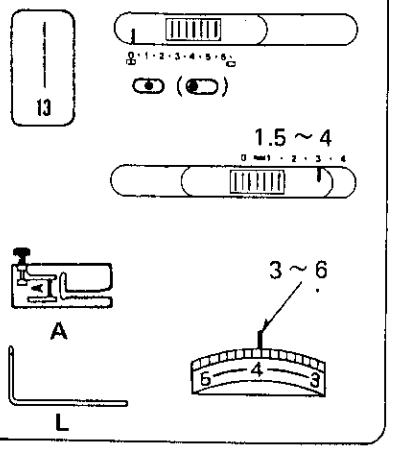

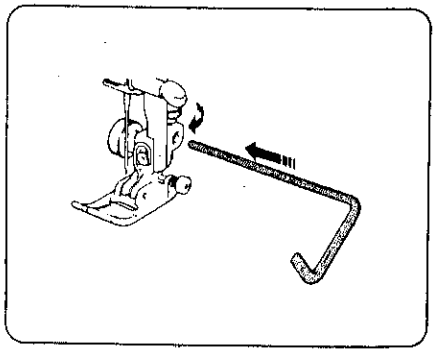

The quilting guide will help to keep the stitching lines straight. Loosen the quilter screw. Slide the quilter in the opening to the desired width and tighten the screw.

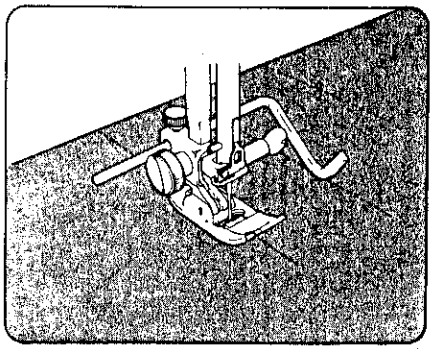

Sew guiding the quilter over the previous row of stitching.

棉被縫即使用於兩片布的中間夾有棉布或毛類的片層狀墊襯，車縫在一起。

車第二道直線時，可將L棒對準第一道線車縫。以下類推。

Shell Tuck
貝殼形裝飾縫法

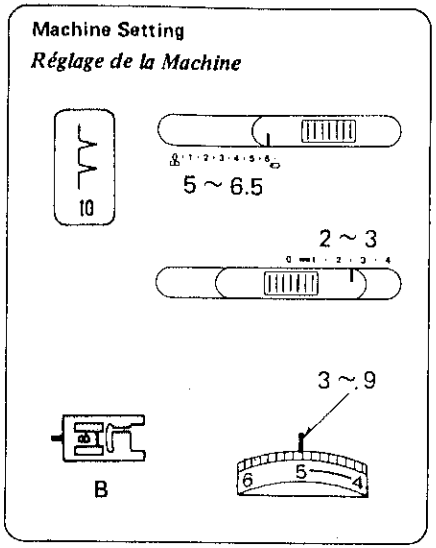

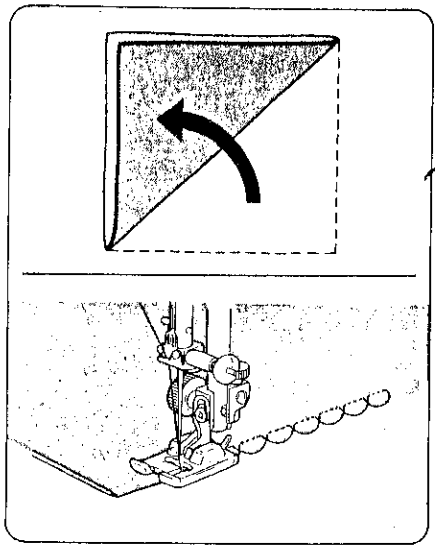

Place the folded edge along the slot of foot. The needle should fall off the edge of the fabric on the right forming a tuck.

1. 布料以斜布紋方向對折

2. 右側落針處剛好在折雙布的邊緣加以縫製。

3. 布料放平整用熨斗燙倒折邊。

Fagoting
兩片布的平行接縫法

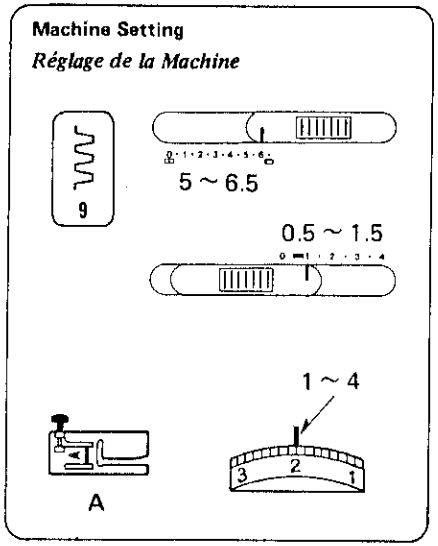

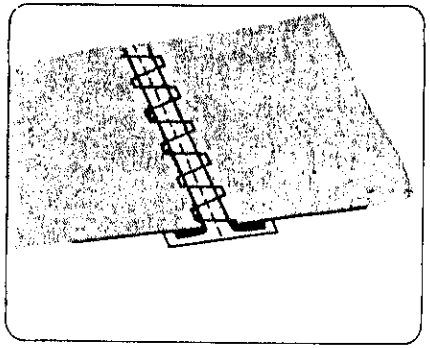

Fold under 1.5 cm (1/2") on each fabric edge and press.
Pin the two edges to paper 0.3 cm (1/8") apart.
Sew slowly guiding the fabric so the needle catches the folded edge on each side.

1. 將兩片布的縫份(1.5cm)1/2"分別折到反面並燙平

2. 在布的下面墊紙兩片布的間隔是0.3公分(1/8")

3. 慢慢的車縫並注意兩片布是否都有車到，完成後將墊紙撕下。

CARE OF YOUR MACHINE

機器的保養方法

Cleaning the Bobbin Holder

梭殼的清掃方法

This machine never needs oiling but the bobbin area and hook race should be cleaned after completion of every garment. Do not store the machine in an area of high humidity, near a radiator or in direct sunlight. Clean the outside of the machine with a soft cloth and neutral soap. Raise the needle and unplug the machine before cleaning.

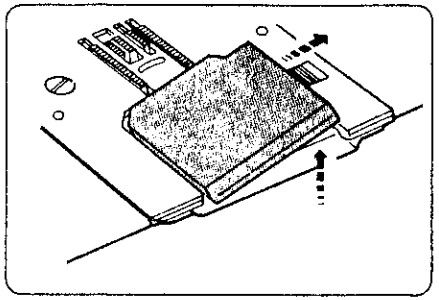

Turn off the power switch or unplug the machine.

Remove the cover plate by sliding the hook cover plate release button to the right.

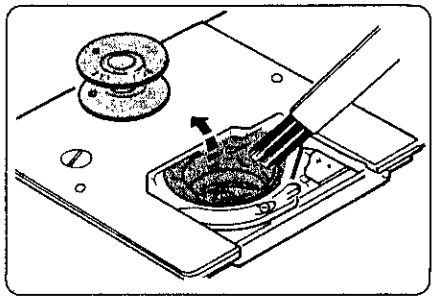

Take out the bobbin.
Brush out dust and lint or you may use a vacuum cleaner.

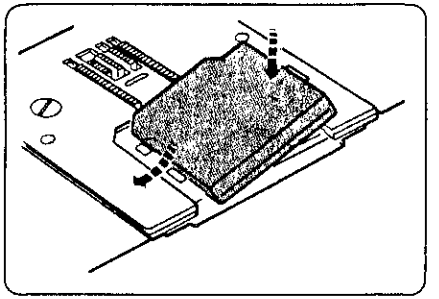

Insert the bobbin.

Attach the hook cover plate.

---

1. 本機不需加油。
2. 請不要放在潮濕的地方或暖氣爐旁邊及在太陽下曝曬。
3. 要清潔表面時請用軟性或中性的清潔劑。
4. 要清潔前請先把電源關掉。

請將開關關掉或電源插頭拔掉。

將梭蓋右邊的按鈕往右推，梭蓋即可自動打開。

取出梭子
用刷子或眞空吸塵器將梭殼內清掃乾淨。

將梭子裝入，並把梭蓋蓋上。

故障的原因及排除法

故障情形	原　　因	參　考
機器聲音太大	1．梭殼的勾線處，殘留有線頭絞線。 2．送布齒被棉屑塞住。	47、48頁 48頁
上線斷線	1．上線穿法錯誤，或其他部位卡住。 2．上線張力太緊。 3．車針彎曲或變鈍。 4．針的裝法不對。 5．已車縫的布未向後送。 6．線的粗細與針不合。	18頁 21頁 13頁 13頁 23頁 14頁
底線斷線	1．梭線的裝法不對。 2．棉絮積壓太多在梭槽內。 3．梭子損壞所以運轉不順。	17頁 47頁 換梭子
斷針	1．車針裝法不對。 2．車針彎曲或變鈍。 3．車針未鎖緊。 4．上線太緊。 5．已車縫的布未向後送。 6．針太細，不適合布料。 7．車針插入布料中時，轉動寬度控制鈕或密度控制鈕。	13頁 13頁 13頁 21頁 23頁 14頁 22頁
跳針	1．車針裝法不正確。 2．車針彎曲或變鈍。 3．針或線的粗細與布料不合。 4．伸縮性布料和較薄的布料未使用〝藍色針頭的針〞。 5．上線穿法不對。 6．壓腳的壓力不夠。	13頁 13頁 14頁 14頁 18頁 10頁

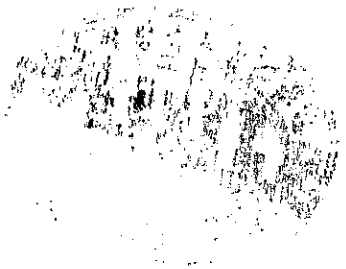

速度調節控制鈕

速度調節器(只有23X)

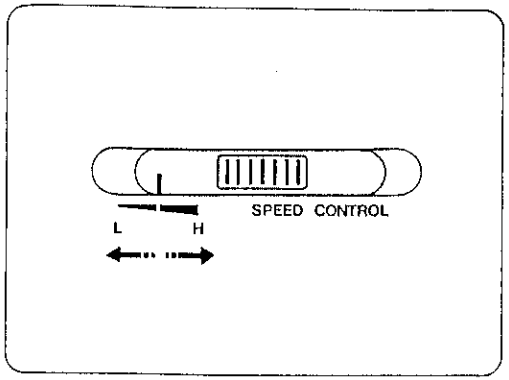

將速度調節器移至右邊速度快。(H)
將速度調節器移至左邊速度較慢。(L)

踏板

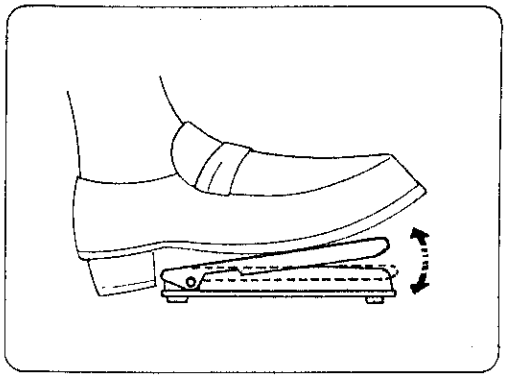

車縫的速度可由腳踏板加壓力的輕重加以控制，腳踏板踏得重機器就車得快。

定上下針的位置

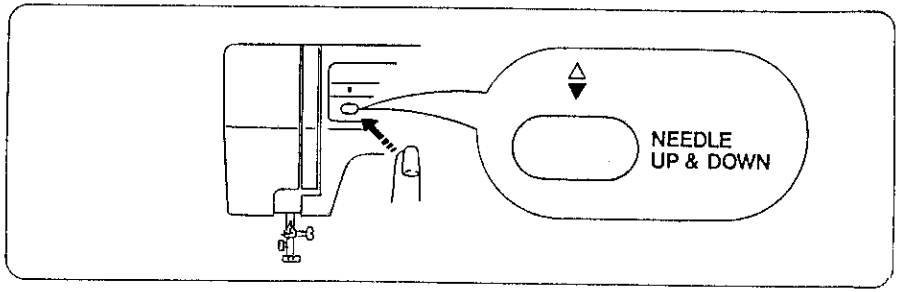

當你按下按鈕時，針的位置可上可下移動。
注意：你按上下針的位置鈕時，不要踩腳踏板。
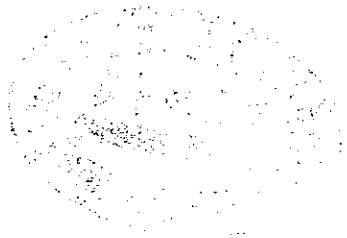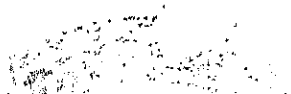
台灣省立嘉義啓智學校
實習輔導處
TEL:05-2858549
嘉義市港坪里大同路100號